STELPRO
360 comfort

USER'S GUIDE

ALUX4 SERIES
ALUMINUM ARCHITECTURAL BASEBOARD

REPLACEMENT COMPONENT LIST INCLUDED

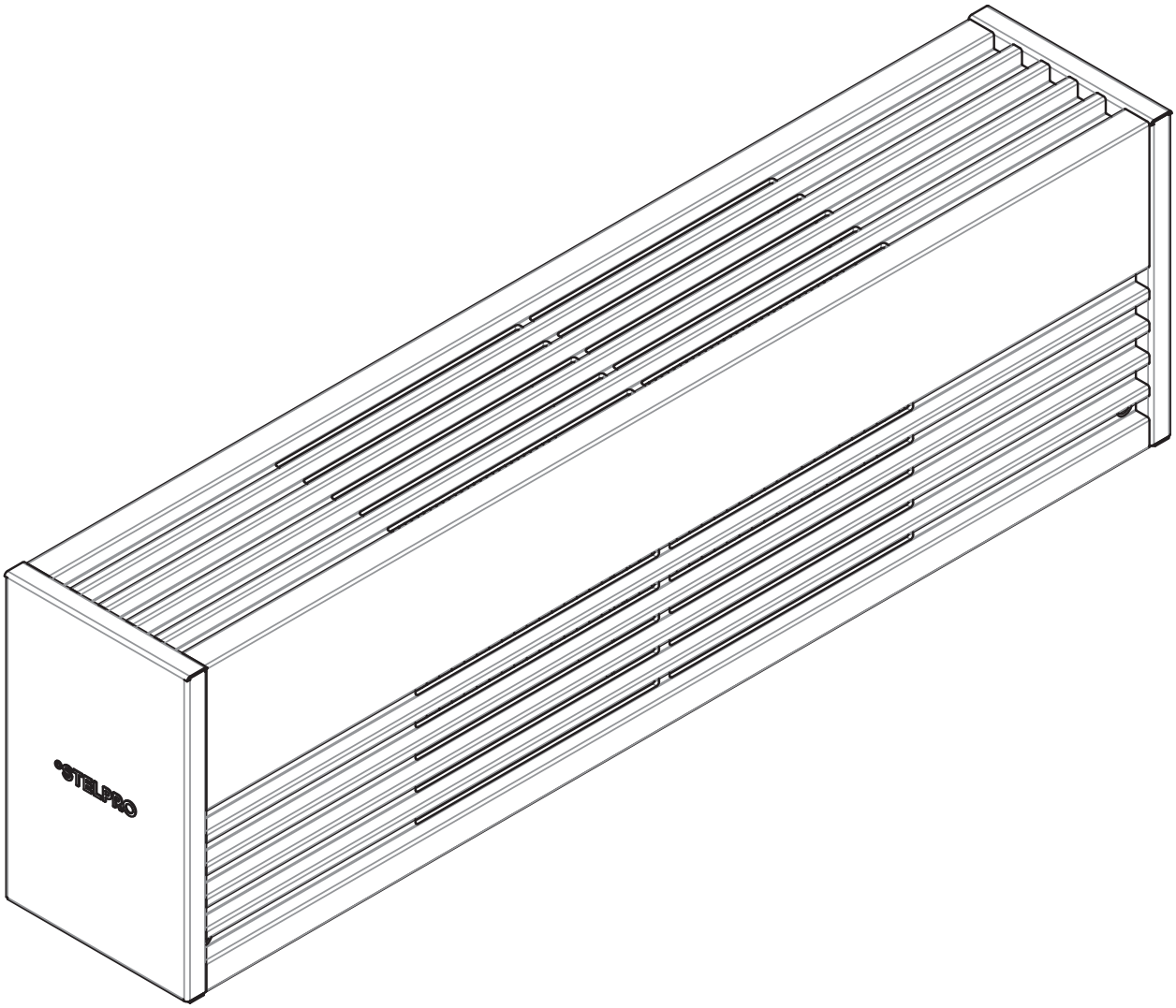

ALUX™
SERIES | SÉRIE

This unit complies with the CSA standards

WARNING

IMPORTANT INSTRUCTIONS

Before installing and operating this product, the user and/or installer must read, understand and follow these instructions and keep them handy for future reference. If these instructions are not followed, the warranty will be considered null and void and the manufacturer deems no further responsibility for this product.

This product must be installed by a qualified person and connected by a **certified electrician**, according to the **electrical and building codes** effective in your region.

The following instructions must be adhered to in order to avoid personal injuries or property damages, serious injuries and potentially fatal electric shocks.

Protect the heating unit with the appropriate circuit breaker or fuse, in accordance with the nameplate.

Make sure the line voltage (volt) is consistent with that indicated on the unit's nameplate.

This unit must be **grounded**.

Switch off the power at the circuit breaker/fuse before installing, repairing and cleaning the unit.

Make sure the unit is appropriate for the intended use (if needed, refer to the product catalog or a representative).

RECOMMENDED HEATING CAPACITY:

1.25 W/cubic foot (0.03 m³).

It corresponds to **10 W/square foot (0.09 m²)** based on a standard ceiling height of 8 feet (2.44 m). The recommended capacity is usually sufficient for normal heating needs. Please note that the insulation quality of walls and windows are some of the factors that influence heat losses, which modify the required capacity to heat a room. If needed, refer to a specialist who will be able to calculate these heat losses and optimize the required capacity or consult the "Online heating calculation" section of the Stelpro Design Web site (residential buildings).

Do not install the unit where objects or pieces of furniture could be heat damaged.

If the unit's capacity is insufficient for the size of the room, it will be in operation continuously, and may become defective earlier and turn yellow.

Respect distances and positions indicated in the installation section.

If the installer or the user modifies the unit, they will be held responsible for any damage resulting from this modification, and the CSA certification could be void.

This unit must not come into contact with a water source and must be protected from splashes (e.g. a wet mop). Do not use if any part has been immersed. Moreover, do not turn it on or off when standing in water or if your hands are wet.

Do not install this product on walls made of synthetic material such as, but not limited to, carpet and wallpaper.

When starting up the unit for the first time or after a long period, it is normal that it produces some temporary odours and whitish smoke.

Because this unit is hot when in use, it may pose risks even in normal operation. Therefore, be **careful** and **responsible** when using it. To avoid burns, do not let bare skin touch hot surfaces. Let unit must cool down for a few minutes before handling it (it will stay warm for some time after shut-down). If provided, use handles when moving this heater.

For appliances with air inlet underneath (BT option), leave a **3 inches (7.6 cm)** clearance space below the appliance. However, make sure objects or pieces of furniture such as, but not limited to, pillows, blankets, towels, beds, laundry baskets, clothing, papers, curtains, etc. do not come into contact with the unit and keep them at least **8 inches (20 cm)** from the unit. Failure to comply with this warning could lead to a fire. Some materials are more heat-sensitive than others, so make sure those near the unit can withstand heat.

Do not install on a wall behind a door.

Never block air vents. This obstruction could lead to overheating, which could result in a fire. Do not use on soft surfaces, like a bed, where openings may become blocked.

Do not insert or allow foreign objects to enter any air vent as this may cause electric shocks, a fire or damages to the unit.

This unit has hot and arcing or sparking parts inside. It is not designed to be used or stored in wet areas or areas containing flammable liquids, combustible materials or corrosive, abrasive, chemical, explosive and flammable substances such as, but not limited to, gasoline, paint, chlorine, sawdust and cleaning products.

Some areas are dustier than others. Thus, it is the user's responsibility to evaluate if the unit **must be cleaned** based on the amount of dirt accumulated on and inside air vents. Accumulated dirt can lead to a component malfunction give a yellowish colour to the unit. Failure to install and maintain unit in accordance with these instructions can lead to a fire.

Thermal protection activation indicates that the unit has been subjected to abnormal operating conditions. If the thermal protection remains activated or activates and deactivates repeatedly, it is recommended that a qualified electrician or a certified repair centre examine the unit in order to make sure it is not damaged. (Refer to the limited warranty.)

If the unit is damaged or defective, cut off power supply at circuit breaker and call a certified repair centre. (Refer to the limited warranty.)

SAVE THESE INSTRUCTIONS

Note: When a part of the product specification must be changed to improve operability or other functions, priority is given to the product specification itself. In such instances, the instruction manual may not entirely match all the functions of the actual product. Therefore, the actual product and packaging, as well as the name and illustration, may differ from the manual.

SPECIFICATIONS & TECHNICAL DRAWINGS

SPECIFICATIONS

DENSITY 500 W PER LINEAR FOOT		DENSITY 400 W PER LINEAR FOOT		DENSITY 300 W PER LINEAR FOOT		VOLTAGE	LENGHT		WEIGHT	
CODE	WATTS	CODE	WATTS	CODE	WATTS	VOLTS	MM	IN	KG	LB
ALUX40610x	1000	ALUX40608x	800	ALUX40606x	600	X	600	23 5/8	4.7	10
ALUX40915x	1500	ALUX40912x	1200	ALUX40909x	900	X	900	35 7/16	6.8	15
ALUX41220x	2000	ALUX41216x	1600	ALUX41212x	1200	X	1200	47 1/4	9	20
ALUX41525x	2500	ALUX41520x	2000	ALUX41515x	1500	X	1500	59 1/16	11	23
ALUX41830x	3000	ALUX41824x	2400	ALUX41818x	1800	X	1800	70 7/8	13	29
ALUX42135x	3500	ALUX42128x	2800	ALUX42121x	2100	X	2100	82 11/16	15	33
ALUX42440x	4000	ALUX42432x	3200	ALUX42424x	2400	X	2400	94 1/2	18	39

Add W for white, SW for soft white or CA for anodized aluminum. For a complete model list, consult our online product catalog at stelpro.com

x = 1 (120 V) 2 (240 V) 3 (347 V) 5 (480 V) 6 (600 V) 7 (277 V) 8 (208 V)

TECHNICAL DRAWINGS

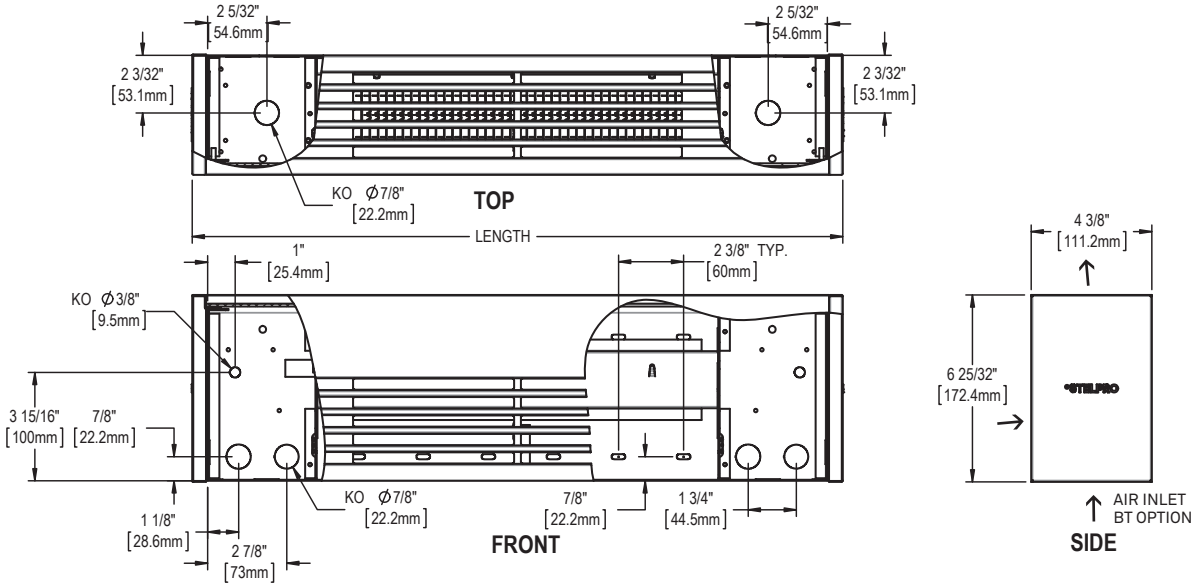

INSTALLATION, OPERATION & MAINTENANCE

INSTALLATION

CAUTION - HIGH TEMPERATURE, KEEP ELECTRICAL CORDS, DRAPES, AND OTHER FURNISHINGS AWAY FROM UNIT.

Keep drapes at a distance of at least 8 inches (20 cm) from unit.

Do not to install unit against combustible low-density cellulose fiberboard surfaces or below an electrical convenience receptacle.

To reduce the risk of fire, do not store or use gasoline or other flammable vapors and liquids in the vicinity of the unit. Do not install unit in contact with combustible materials.

Cut off power supply at circuit breaker/fuse before proceeding with installation.

This product must be surface mounted either on floor or wall. Units with BT option must be installed at least 3 in. (7.6 cm) above the floor. Optional blank sections and fillers are available for a continuous effect. To install accessories (built-in thermostat or relay), refer to the appropriate installation guide.

1. Remove cover.
2. Secure unit on the wall using screws.
3. Put back cover.

When cutting or drilling into a wall, be careful not to damage electrical wiring and other hidden utilities.

ELECTRICAL CONNECTION

Cut off power supply at circuit breaker/fuse before proceeding with connection.

Using a connector (marette), connect the bare wire (ground) to the green wire of the unit. Connect wires from the electrical box to the unit's supply leads in the same fashion.

N.B. This unit must be connected by a qualified electrician, according to the electrical and building codes effective in your region.

ELECTRICAL DIAGRAM

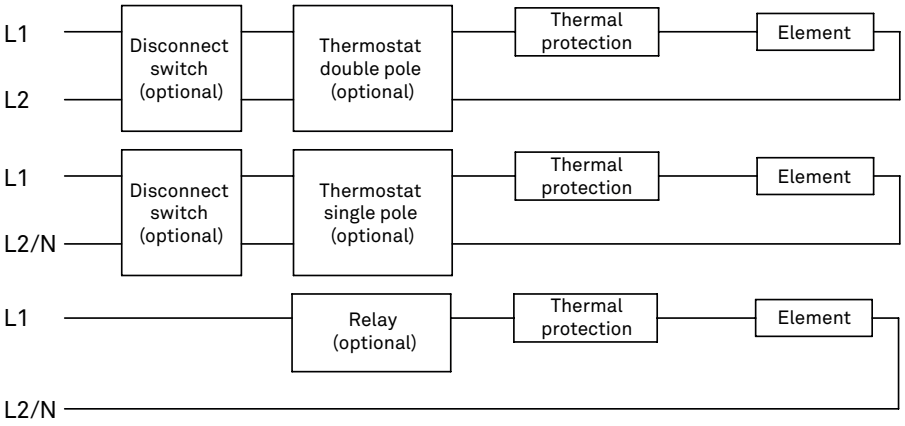

OPERATION

WARNING : the unit must be properly installed before being used.

MAINTENANCE

N.B. The unit should be cleaned at least once a year. All other servicing is to be done by qualified service personnel. This unit must be cleaned regularly In order for the warranty to be valid. Make sure the power has been turned off at the circuit breaker panel and that the heating element has cooled before cleaning the unit or before removing grill for cleaning and lubrication. WARNING: if the unit is equipped with a circuit breaker, the power supply at the main breaker must be turned off before removing the cover of the junction box or to open or close the unit's circuit breaker.

Use a soft rag for dusting. When cleaning, use only a damp rag and non-abrasive dish soap. Do not use abrasive or chemical cleaners because they may damage the finishing. If the unit is used in a very dusty location, use a vacuum brush to remove dust and other foreign objects from the grilles. Note that cigarette smoke can yellow the discharge grille and that the best way to prevent this problem is to clean the unit on a regular basis.

Don't forget to replace front grille (with the screws that were removed) if it was removed for cleaning.

Restore the power when cleaning or lubrication work is complete.

Do not use cleaning products identified with these symbols:

N.B. Note that there is electrical current to the unit even if the thermostat is set off. Meaning that there is a risk of electric shock as long as the unit is energized.

REPLACEMENT COMPONENT LIST

REPLACEMENT COMPONENT LIST

REF. #	PART #	DESCRIPTION
1	PROT-YYY	LINEAR THERMAL PROTECTION (AUTO.)
2	EA01000-06-***	ELEMENT 100 W (600 mm)
2	EA0800-06-***	ELEMENT 800 W (600 mm)
2	EA0600-06-***	ELEMENT 600 W (600 mm)
2	EA1500-09-***	ELEMENT 1500 W (900 mm)
2	EA1200-09-***	ELEMENT 1200 W (900 mm)
2	EA0900-09-***	ELEMENT 900 W (900 mm)
2	EA2000-12-***	ELEMENT 200 W (1200 mm)
2	EA1600-12-***	ELEMENT 1600 W (1200 mm)
2	EA1200-12-***	ELEMENT 1200 W (1200 mm)
2	EA2500-15-***	ELEMENT 2500 W (1500 mm)
2	EA2000-15-***	ELEMENT 200 W (1500 mm)
2	EA1500-15-***	ELEMENT 1500 W (1500 mm)
2	EA3000-18-***	ELEMENT 3000 W (1800 mm)
2	EA2400-18-***	ELEMENT 2400 W (1800 mm)
2	EA1800-18-***	ELEMENT 1800 W (1800 mm)

REF. #	PART #	DESCRIPTION
2	EA3500-21-***	ELEMENT 3500 W (2100 mm)
2	EA2800-21-***	ELEMENT 2800 W (2100 mm)
2	EA2100-21-***	ELEMENT 2100 W (2100 mm)
2	EA4000-24-***	ELEMENT 4000 W (2400 mm)
2	EA3200-24-***	ELEMENT 3200 W (2400 mm)
2	EA2400-24-***	ELEMENT 2400 W (2400 mm)
2	EA1600-24-*	ELEMENT 1600 W (2400 mm)
2	EA1750-21-*	ELEMENT 1750 W (2100 mm)
2	EA2000-24-*	ELEMENT 2000 W (2400 mm)
2	EC0375-06-*	ELEMENT 375 W (600 mm)
2	EC0500-09-*	ELEMENT 500 W (900 mm)
2	EC0700-12-*	ELEMENT 700 W (1200 mm)
2	EC0875-15-*	ELEMENT 875 W (1500 mm)
2	EC1050-18-*	ELEMENT 1050 W (1800 mm)
2	EC1200-21-*	ELEMENT 1200 W (2100 mm)
2	EC1400-24-*	ELEMENT 1400 W (2400 mm)

***	Add	1 (120 V)	2 (240 V)	3 (347 V)	5 (480 V)	6 (600 V)	7 (277 V)	8 (208 V)
yyy	=	185 (600 mm)	186 (900 mm)	187 (1200 mm)	180 (1500 mm)	181 (1800 mm)	182 (2100 mm)	183 (2400 mm)

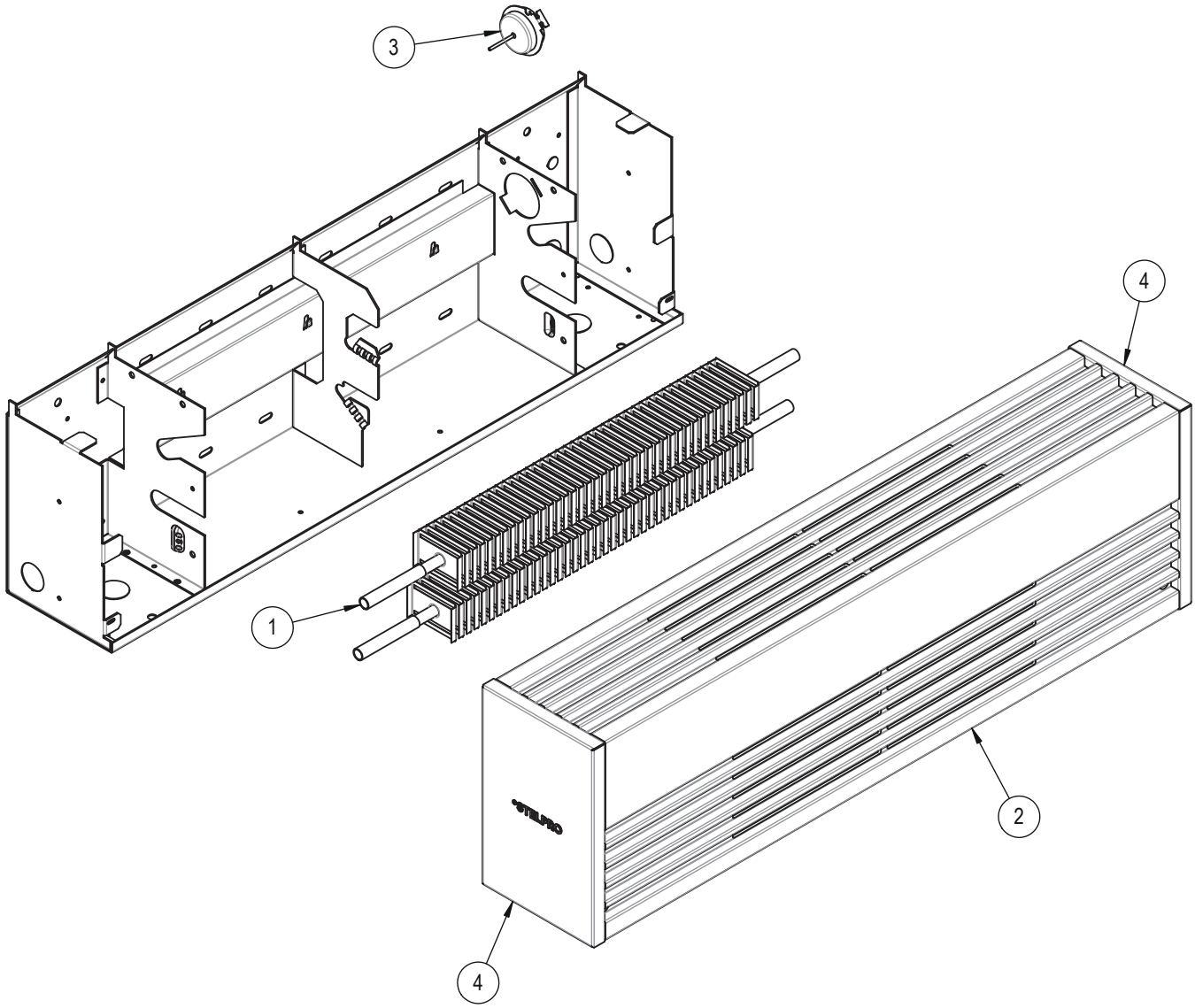

TROUBLESHOOTING

TROUBLESHOOTING

PROBLEM	DEFECTIVE PART OR PART TO CHECK
The unit does not work	• Defective thermostat or wrong thermostat setting • Open circuit breaker or fuse • Thermal protection activated • Faulty connections • Damaged or defective plug or outlet
The unit runs continuously	• Defective thermostat or wrong thermostat setting • Heat losses greater than the unit's capacity
The enclosure is extremely hot	• Defective thermal protection • Blocked air vents
The unit cycles under control of the thermal protection (overheat indicator)	• Blocked air vents
Overheating	• Defective thermostat or wrong thermostat setting
The breaker trips when the heater is turned on	• Faulty connections • Voltage greater than that indicated on the nameplate
The desired room temperature cannot be reached	• One or more defective elements • Defective thermostat or wrong thermostat setting • Voltage lower than that indicated on the nameplate • Heat losses greater than the unit's capacity

N.B. If you do not solve the problem after checking these points, cut off the power supply at the main electrical panel and contact our customer service (see the "Limited warranty" section to obtain the phone numbers).

LIMITED WARRANTY LIMITED WARRANTY LIMITED WARRANTY LIMITED WARRANTY LIMITED WARRANTY

LIMITED WARRANTY

This limited warranty is offered by Stelpro Design inc. ("Stelpro") and applies to the following product made by Stelpro: Alux4 model. **Please read this limited warranty carefully.** Subject to the terms of this warranty, Stelpro warrants its products and their components against defects in workmanship and/or materials for the following periods from the date of purchase: **3 years**. This warranty applies only to the original purchaser; it is non-transferable and cannot be extended.

CLAIM PROCEDURE

If at any time during the warranty period the unit becomes defective, you must cut off the power supply at the main electrical panel and contact 1) your installer or distributor, 2) your service center or 3) Stelpro's customer service department. In all cases, you must have a **copy of the invoice** and provide the **information written on the product nameplate**. Stelpro reserves the right to examine or to ask one of its representatives to examine the product itself or any part of it before honoring the warranty. Stelpro reserves the right to replace the entire unit, refund its purchase price or repair a defective part. Please note that repairs made within the warranty period must be authorized in advance in writing by Stelpro and carried out by persons authorized by Stelpro.

Before returning a product to Stelpro, you must have a Stelpro authorization number (RMA). To obtain it, call the customer service department at: **1-800-363-3414** (electricians and distributors - French), **1-800-343-1022** (electricians and distributors - English), or **1-866-766-6020** (consumers). The authorization number must be clearly written on the parcel or it will be refused.

CONDITIONS, EXCLUSIONS AND DISCLAIMER OF LIABILITY

This warranty is exclusive and in lieu of all other representations and warranties (except of title), expressed or implied, and Stelpro expressly disclaims and excludes any implied warranty of merchantability or implied warranty of fitness for a particular purpose.

Stelpro's liability with respect to products is limited as provided above. Stelpro shall not be subject to any other obligations or liabilities whatsoever, whether based on contract, tort or other theories of law, with respect to goods or services furnished by it, or any undertakings, acts or omissions relating thereto. Without limiting the generality of the foregoing, Stelpro expressly disclaims any liability for property or personal injury damages, penalties, special or punitive damages, damages for lost profits, loss of use of equipment, cost of capital, cost of substitute products, facilities or services, shutdowns, slowdowns, or for other types of economic loss or for claims of a dealer's customers or any third party for such damages. Stelpro specifically disclaims all consequential, incidental and contingent damages whatsoever.

This warranty does not cover any damages or failures resulting from: 1) a faulty installation or improper storage; 2) an abusive or abnormal use, lack of maintenance, improper maintenance (other than that prescribed by Stelpro) or a use other than that for which the unit was designed; 3) a natural disaster or an event out of Stelpro's control, including, but not limited to, hurricanes, tornadoes, earthquakes, terrorist attacks, wars, overvoltage, flooding, water damages, etc. This warranty does not cover any accidental or intentional losses or damages, nor does it cover damages caused by negligence of the user or owner of the product. Moreover, it does not cover the cost of disconnection, transport, and installation.

The warranty is limited to the repair or the replacement of the unit or the refund of its purchase price, **at the discretion of Stelpro**. Any parts replaced or repaired within the warranty period with the written authorization of Stelpro will be warranted for the remainder of the original warranty period. This warranty will be considered null and void and Stelpro will have the right to refuse any claims if **products have been altered** without the written authorization of Stelpro and if the nameplate numbers have been removed or modified. This warranty does not cover scratches, dents, corrosion or discoloration caused by excessive heat, chemical cleaning products and abrasive agents. It does not cover any damage that occurred during the shipping.

Some states and provinces do not allow the exclusion or limitation of incidental or consequential damages and some of them do not allow limitations on how long an implied warranty lasts, so these exclusions or limitations may not apply to you. This warranty gives you specific legal rights and you may have other rights which vary from state to state or from province to province.