SSALE150

ERV - ENERGY RECOVERY VENTILATOR



SSALE150S
Side Port



SSALE150T
Top Port

SSALE150T-F
Top Port With Foam

CSA-C439-18

2100 HVI CERTIFIED

ULTRA-SLIM, WITH POWER TO SPARE

When space is tight, the SSALE150 delivers. At just 9 inches thick, it tucks into the ceiling or hangs where space is limited. It brings in up to 140 CFM of fresh air and offers 63% sensible recovery, reducing heating demand in winter and cooling demand in summer. Its core rinses clean in soapy water, and the hinged door gives easy access to components. No drain, no hassle. An ideal choice for multi-unit buildings and medium-sized homes.

AIR FLOW AND PERFORMANCE

- Fully adjustable air flow (140 cfm at 0.1 in.w.g.).
- 63% sensible recovery effectiveness at 0 °C (32 °F) 30 L/s.

VOLTAGE

- 120V, 60 Hz, 1A, 94W.

BENEFIT

- Reduces heating demand in winter and cooling demand in summer.
- Ultra-quiet: factory calibrated and balanced.
- Easy installation and maintenance.
- Designed and manufactured in Canada to operate in variable climatic conditions.

CONSTRUCTION

- Door and housing in corrosion-resistant galvanized steel, 24-gauge, pre-painted neutral white.
- Convenient, screwless hinged door.
- Ultra-thin: 9 in. (229 mm).
- No drain required.
- Lightweight for ease of installation: 33 lb (15 kg).
- Duct connections size: 5 in. (127 mm).
- Merv8 charcoal polyester filters. Merv13 filters in option (SA-FI-M13).
- Two configurations to optimize your space: Side Port or Top Port models.
- Reverse air flow configuration available as a factory installed option (-R). For further explanation, please refer to the document Normal and Reverse.
- Foam for ceiling installation for Top Port models only, available as a factory installed option (-F).
- Stale air exhaust requires a backdraft damper (not included).

MOTOR

- Two high-efficiency sealed motors with closed housing and automatic thermal protection.
- Balancing without flow keys. 100% electronic adjustment.
- Integrated pressure ports on the door for quick and accurate balancing.

ENERGY RECOVERY CORE

- High-efficiency, highly durable 100% polymer core.
- Recovers both latent and sensible energy. (Heat and Humidity).
- Meets or exceeds ASHRAE 90.1-2010 requirements.
- Washable with soapy water to restore full performance without degradation or contamination.
- Antimicrobial protection - ISO846.
- No virus transfer – tested per ASTM F1671.
- Zero cross-contamination – certified per AHRI 1060
- Flammability tested – UL 94 HB.

CONTROL

- 2 control choices available:
  - Optional Decora-style wall-mounted control/timer (SA-LT15). INTERMITTENT (20-40) – CONTINUOUS – OFF – Timer (20-40-60 minutes).
  - Optional digital Decora-style wall-mounted control/timer (SA-LCD15). INTERMITTENT (20-40) – CONTINUOUS – Humidity – Recirculation – OFF.

INSTALLATION

- Can be ceiling-mounted or suspended.
- Easily installed in the ceiling void or just below the fire-rated ceiling.
- Set of nylon suspension straps included for installation.
- Steel mounting plate for Top Port with foam models only, available as an option (SA-P5).
- Furnace interconnect plug connector, included.

SETTING (AIR FLOW)

- Balance the unit using the supplied instructions.
- All the installer needs are the required flow rates, a manometer, and 5 minutes to adjust and balance the system.
- Simply specify the air flow rates for Low Speed and High Speed.
- The static pressure of the system should ideally be less than or equal to the static pressure indicated by the graph for High Speed.
- You don't have to worry about static pressure to limit air flow or adding flow keys as other devices. All you must do is provide ducting that doesn't limit maximum flow, and the unit's adjustments will allow you to fine-tune flow rates.

WARRANTY

- Motor 5-year. Other parts except filters and pre-filters 1-year.

APPLICATION

- The ideal solution for high-rise apartments and small to medium-size homes, when regulations do not require unit certification at -25 °C (-13 °F).
- Improves indoor air quality by exhausting pollutants, dust, and allergens outdoors, while supplying an equivalent amount of fresh air in the home.

Important note

No controls are included with the purchase of an ERV or HRV. SA-LT15 and SA-LCD15 controls must be purchased separately.

FC_SSALE150_EN_091026

STELPRO

Stelpro reserves the right to modify at any time the description, manufacturing, or price of its products. Additionally, Stelpro may apply restocking fees or refuse a refund based on one or more of the following criteria: optional color, custom product, assembly with low-demand options. For the latest product information and prices regarding the products, please visit the website www.stelpro.com.

SIDE PORT MODEL

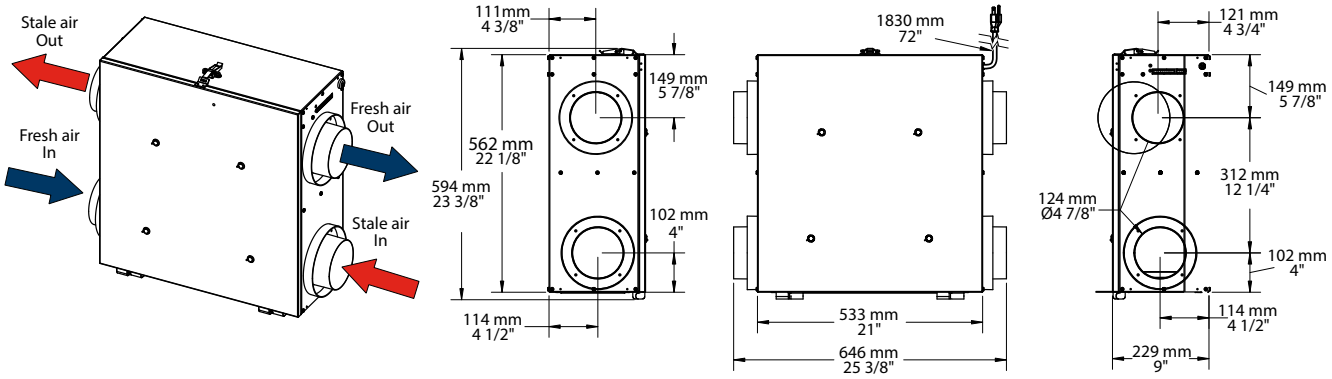

TOP PORT MODEL

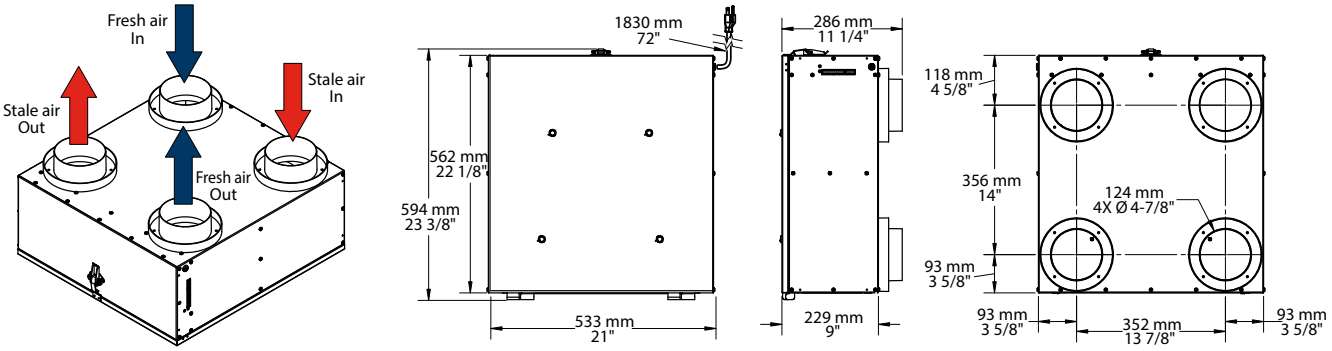

ERV SSALE150 - CURVES AT HIGHEST SPEED

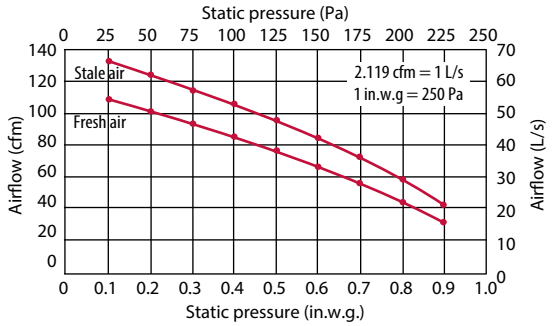

ENERGY RATINGS - HVI CERTIFIED

Outdoor Temperature		Air flow		Power	Sensible Recovery Efficiency (SRE)[1]	Adjusted Sensible Recovery Efficiency	Latent Recovery / Moisture Transfer
°C	°F	CFM	L/S	W	%	%	%
Heating							
0	32	53	25	54	60	67	51
0	32	64	30	62	63	69	49
0	32	104	49	96	59	64	44
Cooling					Total Recovery Efficiency	Adjusted Total Recovery Efficiency	
35	95	53	25	57	49	53	53

MODELS

PRODUCT #	CFM	RECIRCULATION	SRE[1] 0 °C (32 °F) 30 L/S	SRE[1] -25 °C (-13 °F) 24 L/S	PORT IN.	PORT MM	VOLTS	HERTZ	AMP.	WEIGHT LB	WEIGHT KG
ERV energy recovery ventilator 140 cfm Side Port											
SSALE150S	140	No	63%	No	5	127	120	60	1	33	15
ERV energy recovery ventilator 140 cfm Top Port											
SSALE150T	140	No	63%	No	5	127	120	60	1	33	15

[1] SRE: Sensible Recovery Efficiency.

OPTIONS

PRODUCT # KIT	PRODUCT # FACTORY INSTALLED*	DESCRIPTION
-	**-F**	Foam only for ERV Top Port
-	**-R**	Reverse air flow
KIT-SA-FI-115	-	Kit of 2 Merv8 filters for ERV 115R
SA-FI-M13		Merv13 filter for ERV 115-115R-150
SA-P5	-	Steel mounting plate only for ERV 115-150 Top Port with foam

* For factory installed options, add the option number to the product number.

CONTROLS (SOLD SEPARATELY)

PRODUCT #	DESCRIPTION	
SA-LCD15[2]	Digital Decora-style wall-mounted control/timer for residential ERV and HRV	
SA-LT15[2]	Decora-style wall-mounted control/timer for residential ERV and HRV	

[2] Must be purchased separately.

Stelpro reserves the right to modify at any time the description, manufacturing, or price of its products. Additionally, Stelpro may apply restocking fees or refuse a refund based on one or more of the following criteria: optional color, custom product, assembly with low-demand options. For the latest product information and prices regarding the products, please visit the website www.stelpro.com.