SSAME115R

ERV - ENERGY RECOVERY VENTILATOR WITH RECIRCULATION



SSAME115RS
Side Port



SSAME115RT
Top Port

SSAME115RT-F
Top Port With Foam

-25°C
-13°F

CSA-C439-18

2100 HVI CERTIFIED

FRESH AIR IN WINTER, WITHOUT THE HEAT LOSS

Winter is no match for it. Energy Star certified, thanks to its recirculation defrost, the SSAME115R maintains 60% sensible recovery at -25°C and climbs to 67% at 0°C. At just 9 in. thick, it mounts to the ceiling or hangs in tight spaces, delivering airflow up to 112 CFM. It reduces heating demand in winter and cooling demand in summer, while continuously bringing in fresh air. It improves indoor air quality by eliminating allergens, pollutants, and odors, for a healthier indoor environment. The core cleans with soapy water, the hinged door simplifies maintenance, and no drain is required. A smart choice for high-rise residential buildings and small to medium-sized homes.

AIR FLOW AND PERFORMANCE

- Fully adjustable air flow (112 cfm at 0.1 in w.g.).
- Sensible recovery efficiency (SRE) of 67% at 0 °C (32 °F) 30 L/s.
- Sensible recovery efficiency of 60% at -25°C (-13°F) 24L/s.
- Recirculation defrosts.

VOLTAGE

- 120V, 60 Hz, 0.6A. 66W.

BENEFIT

- Reduces heating demand in winter and cooling demand in summer.
- Ultra-quiet: factory calibrated and balanced
- Easy installation and maintenance.
- Designed and manufactured in Canada to operate in variable climatic conditions.

CONSTRUCTION

- Door and housing in corrosion-resistant galvanized steel, 24-gauge, pre-painted neutral white.
- Convenient, screwless hinged door.
- Ultra-thin: 9 in. (229 mm).
- No drain required.
- Lightweight for ease of installation: 37 lb (16.8 kg).
- Duct connections size: 5 in. (127 mm).
- Merv8 charcoal polyester filters. Merv13 filters in option (SA-FI-M13).
- Two configurations to optimize your space: Side Port or Top Port models.
- Reverse air flow configuration available as a factory installed option (-R). For further explanation, please refer to the document Normal and Reverse.
- Foam for ceiling installation for Top Port models only, available as a factory installed option (-F).
- Stale air exhaust requires a backdraft damper (not included).

MOTOR

- Two high-efficiency sealed motors with closed housing and automatic thermal protection.
- Balancing without flow keys. 100% electronic adjustment.
- Integrated pressure ports on the door for quick and accurate balancing.

ENERGY RECOVERY CORE

- High-efficiency, highly durable 100% polymer core.
- Recovers both latent and sensible energy (heat and humidity).
- Meets or exceeds ASHRAE 90.1-2010 requirements.
- Washable with soapy water to restore full performance without degradation or contamination.
- Antimicrobial protection - ISO846.
- No virus transfer – tested per ASTM F1671.
- Zero cross-contamination – certified per AHRI 1060.
- Flammability tested – UL 94 HB.

CONTROL

- 2 control choices available:
  - Optional Decora-style wall-mounted control/timer (SA-LT15). INTERMITTENT (20-40) – CONTINUOUS – OFF – Timer (20-40-60 minutes).
  - Optional digital Decora-style wall-mounted control/timer (SA-LCD15). INTERMITTENT (20-40) – CONTINUOUS – Humidity – Recirculation – OFF.

INSTALLATION

- Can be ceiling-mounted or suspended.
- Easily installed in the ceiling void or just below the fire-rated ceiling.
- Set of nylon suspension straps included for installation.
- Steel mounting plate for Top Port with foam models only, available as an option (SA-P5R).
- Removable terminal block for furnace interconnection, available upon resquest.

SETTING (AIR FLOW)

- Balance the unit using the supplied instructions.
- All the installer needs are the required flow rates, a manometer, and 5 minutes to adjust and balance the system.
- Simply specify the air flow rates for Low Speed and High Speed.
- The static pressure of the system should ideally be less than or equal to the static pressure indicated by the graph for High Speed.
- You don't have to worry about static pressure to limit air flow or adding flow keys as other devices. All you must do is provide ducting that doesn't limit maximum flow, and the unit's adjustments will allow you to fine-tune flow rates.

WARRANTY

- Motor 5-year. Other parts except filters and pre-filters 1-year.

APPLICATION

- Ideal for high-rise apartments buildings and small to mid-size homes.
- Improves indoor air quality by exhausting pollutants, dust, and allergens outdoors, while supplying an equivalent amount of fresh air in the home.

Important note

No controls are included with the purchase of an ERV or HRV. SA-LT15 and SA-LCD15 controls must be purchased separately.

FC_SSAME115R_EN_091026

°STELPRO

Stelpro reserves the right to modify at any time the description, manufacturing, or price of its products. Additionally, Stelpro may apply restocking fees or refuse a refund based on one or more of the following criteria: optional color, custom product, assembly with low-demand options. For the latest product information and prices regarding the products, please visit the website www.stelpro.com.

SIDE PORT MODEL

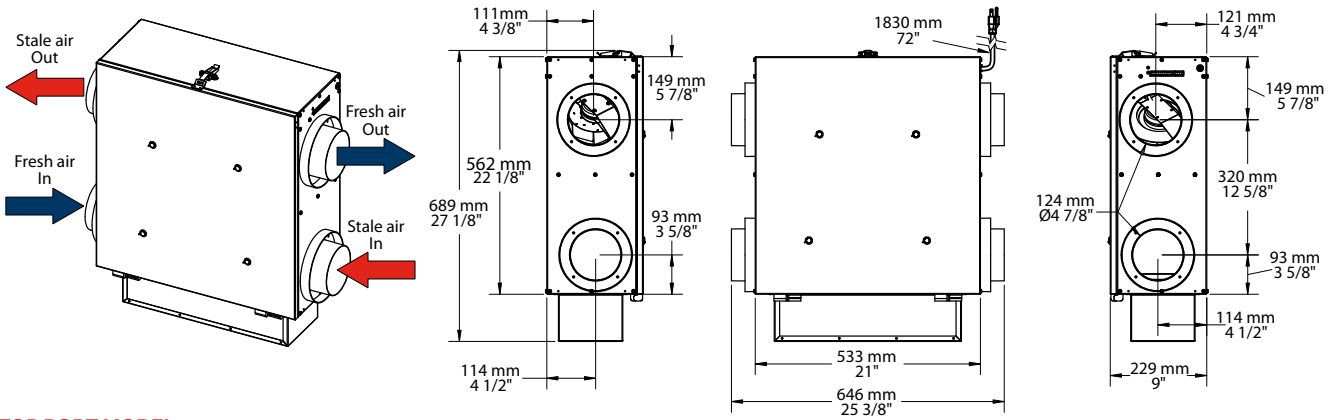

TOP PORT MODEL

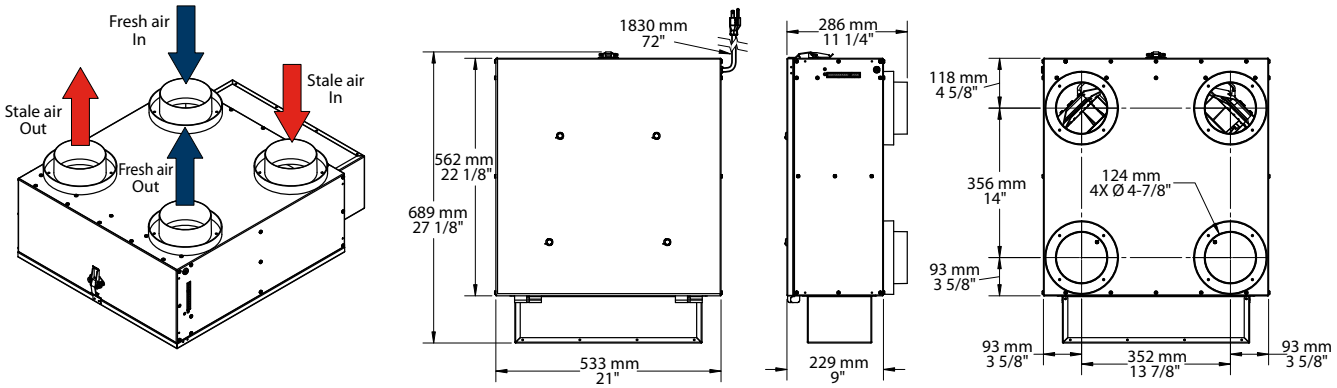

ERV SSAME115R - CURVES AT HIGHEST SPEED

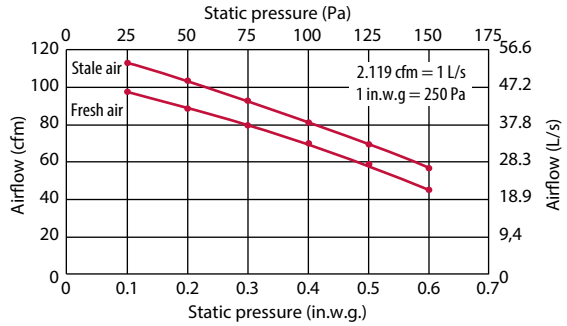

ENERGY RATINGS - HVI CERTIFIED

Outdoor Temperature		Air flow		Power	Sensible Recovery Efficiency (SRE)[1]	Adjusted Sensible Recovery Efficiency	Latent Recovery / Moisture Transfer
°C	°F	CFM	L/S	W	%	%	%
Heating							
0	32	47	22	34	70	75	61
0	32	64	30	40	67	71	54
0	32	85	40	54	63	68	49
-25	-13	51	24	41	60	63	50
Cooling					Total Recovery Efficiency	Adjusted Total Recovery Efficiency	
35	95	47	22	34	53	56	51

MODELS

PRODUCT #	CFM	RECIRCULATION	SRE[1] 0 °C (32 °F) 30 L/S	SRE[1] -25 °C (-13 °F) 24 L/S	PORT IN.	PORT MM	VOLTS	HERTZ	AMP.	WEIGHT LB	WEIGHT KG
ERV energy recovery ventilator 112 cfm with recirculation Side Port											
SSAME115RS	112	Yes	67%	60%	5	127	120	60	0.6	37	16.8
ERV energy recovery ventilator 112 cfm with recirculation Top Port											
SSAME115RT	112	Yes	67%	60%	5	127	120	60	0.6	37	16.8

[1] SRE: Sensible Recovery Efficiency.

OPTIONS

PRODUCT # KIT	PRODUCT # FACTORY INSTALLED*	DESCRIPTION
-	**-F**	Foam only for ERV Top Port
-	**-R**	Reverse air flow
KIT-SA-FI-115	-	Kit of 2 Merv8 filters for ERV 115R
SA-FI-M13	-	Merv13 filter for ERV 115-115R-150
SA-P5R	-	Steel mounting plate only for ERV 115R Top Port with foam

* For factory installed options, add the option number to the product number.

CONTROLS (SOLD SEPARATELY)

PRODUCT #	DESCRIPTION	
SA-LCD15[2]	Digital Decora-style wall-mounted control/timer for residential ERV and HRV	
SA-LT15[2]	Decora-style wall-mounted control/timer for residential ERV and HRV	

[2] Must be purchased separately.

Stelpro reserves the right to modify at any time the description, manufacturing, or price of its products. Additionally, Stelpro may apply restocking fees or refuse a refund based on one or more of the following criteria: optional color, custom product, assembly with low-demand options. For the latest product information and prices regarding the products, please visit the website www.stelpro.com.