SSAME230R

ERV - ENERGY RECOVERY VENTILATOR WITH RECIRCULATION



SSAME230RS
Side Port

CSA-C439-18 | HVI CERTIFIED | AHRI CERTIFIED | -25°C -13°F

BIG AIRFLOW THAT STANDS UP TO THE COLD

With airflow up to 212 CFM, the SSAME230R ventilates larger spaces. Its recirculation defrost keeps sensible recovery at 58% at -25 °C, and up to 68% at 0 °C. Compact for its power (12 in. thick), it hangs easily using the supplied straps. It reduces heating demand in winter and cooling demand in summer. The core rinses clean in soapy water, the hinged door simplifies maintenance and no drain is required. A solution built for multi-unit buildings and medium-sized homes.

AIR FLOW AND PERFORMANCE
- Fully adjustable air flow (212 cfm @ 0.1 in.w.g).
- Sensible recovery efficiency (SRE) of 68% at 0 °C (32 °F) 30 L/s.
- Sensible recovery efficiency (SRE) of 58% at -25 °C (-13 °F) 26 L/s
- Recirculation defrosts.

VOLTAGE
- 120V, 60 Hz, 1.5A, 124W.

BENEFIT
- Reduces heating demand in winter and cooling demand in summer.
- Ultra-quiet: factory calibrated and balanced.
- Easy installation and maintenance.
- Designed and manufactured in Canada to operate in variable climatic conditions.

CONSTRUCTION
- Door and housing in corrosion-resistant galvanized steel, 24-gauge, pre-painted neutral white.
- Convenient, screwless hinged door.
- Ultra-thin: 12 in. (305 mm).
- No drain required.
- Lightweight for ease of installation: 43 lb (19.5 kg).
- Duct connections size: 6 in. (152 mm).
- Merv8 charcoal polyester filters.
- Side Port model only.
- Reverse air flow configuration available as a factory installed option (-R).
- For further explanation, please refer to the document Normal and Reverse.
- Stale air exhaust requires a backdraft damper (not included).

MOTOR
- Two high-efficiency sealed motors with closed housing and automatic thermal protection.
- Balancing without flow keys. 100% electronic adjustment.
- Integrated pressure ports on the door for quick and accurate balancing.

ENERGY RECOVERY CORE
- High-efficiency, highly durable 100% polymer core.
- Recovers both latent and sensible energy. (Heat and Humidity).
- Meets or exceeds ASHRAE 90.1-2010 requirements.
- Washable with soapy water to restore full performance without degradation or contamination.
- Antimicrobial protection - ISO846.
- No virus transfer – tested per ASTM F1671.
- Zero cross-contamination – certified per AHRI 1060.
- Flammability tested – UL 94 HB.

CONTROL
- 2 control choices available:
  - Optional Decora-style wall-mounted control/timer (SA-LT15). INTERMITTENT (20-40) – CONTINUOUS – OFF – Timer (20-40-60 minutes).
  - Optional digital Decora-style wall-mounted control/timer (SA-LCD15). INTERMITTENT (20-40) – CONTINUOUS – Humidity – Recirculation – OFF.

INSTALLATION
- Can be ceiling-mounted or suspended.
- Easily installed in the ceiling void or just below the fire-rated ceiling.
- Set of nylon suspension straps included for installation.
- Furnace interconnect plug connector, included.

SETTING (AIR FLOW)
- Balance the unit using the supplied instructions.
- All the installer needs are the required flow rates, a manometer, and 5 minutes to adjust and balance the system.
- Simply specify the air flow rates for Low Speed and High Speed.
- The static pressure of the system should ideally be less than or equal to the static pressure indicated by the graph for High Speed.
- You don't have to worry about static pressure to limit air flow or adding flow keys as other devices. All you must do is provide ducting that doesn't limit maximum flow, and the unit's adjustments will allow you to fine-tune flow rates.

WARRANTY
- Motor 5-year. Other parts except filters and pre-filters 1-year.

APPLICATION
- Ideal for multi-residential buildings and small to mid-size homes.
- Improves indoor air quality by exhausting pollutants, dust, and allergens outdoors, while supplying an equivalent amount of fresh air in the home.

Important note

No controls are included with the purchase of an ERV or HRV.
SA-LT15 and SA-LCD15 controls must be purchased separately.

FC_SSAME230R_EN_091026

°STELPRO

Stelpro reserves the right to modify at any time the description, manufacturing, or price of its products. Additionally, Stelpro may apply restocking fees or refuse a refund based on one or more of the following criteria: optional color, custom product, assembly with low-demand options. For the latest product information and prices regarding the products, please visit the website www.stelpro.com.

SIDE PORT MODEL

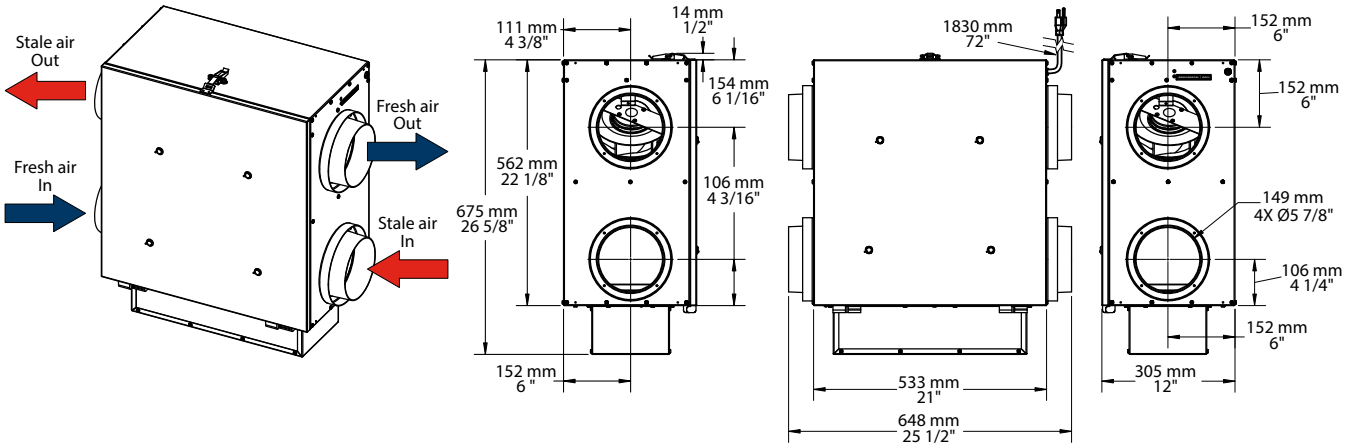

ERV SSAME230R - CURVES AT HIGHEST SPEED

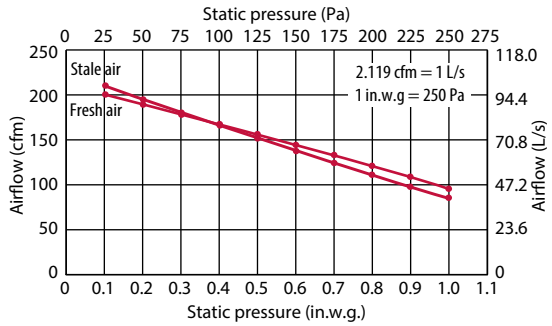

ENERGY RATINGS - HVI CERTIFIED

Outdoor Temperature		Air flow		Power	Sensible Recovery Efficiency (SRE)[1]	Adjusted Sensible Recovery Efficiency	Latent Recovery / Moisture Transfer
°C	°F	CFM	L/S	W	%	%	%
Heating							
0	32	47	22	62	70	79	67
0	32	64	30	76	68	76	61
0	32	85	40	90	66	73	56
-25	-13	55	26	81	58	62	56
Cooling					Total Recovery Efficiency	Adjusted Total Recovery Efficiency	
35	95	47	22	62	56	62	63

MODEL

PRODUCT #	CFM	RECIRCULATION	SRE[1] 0 °C (32 °F) 30 L/S	SRE[1] -25 °C (-13 °F) 24 L/S	PORT IN.	PORT MM	VOLTS	HERTZ	AMP.	WEIGHT LB	WEIGHT KG
ERV energy recovery ventilator 212 cfm with recirculation Side Port											
SSAME230RS	212	Oui	68%	58%	6	152	120	60	1,1	43	19.5

[1] SRE: Sensible Recovery Efficiency

OPTIONS

PRODUCT # KIT	PRODUCT # FACTORY INSTALLED*	DESCRIPTION
-	-R	Reverse air flow
KIT-SA-FI-230	-	Kit of 2 Merv8 filters for ERV 230R

* For factory installed options, add the option number to the product number.

CONTROLS (SOLD SEPARATELY)

PRODUCT #	DESCRIPTION	
SA-LCD15[2]	Digital Decora-style wall-mounted control/timer for residential ERV and HRV	
SA-LT15[2]	Decora-style wall-mounted control/timer for residential ERV and HRV	

[2] Must be purchased separately.

Stelpro reserves the right to modify at any time the description, manufacturing, or price of its products. Additionally, Stelpro may apply restocking fees or refuse a refund based on one or more of the following criteria: optional color, custom product, assembly with low-demand options. For the latest product information and prices regarding the products, please visit the website www.stelpro.com.