SSKHE130R

ERV - ENERGY RECOVERY VENTILATOR WITH RECIRCULATION



SSKHE130RT
Top Port

CSA-C439-18

2100 HVI CERTIFIED

ENERGY STAR

-25°C -13°F

HIGH PERFORMANCE, CLOSET-FRIENDLY SIZE

Designed to fit in a closet just 24 inches deep, the SSKHE130R mounts to the wall or hangs suspended. Energy Star certified, its counterflow core recovers up to 75% of sensible heat at 0°C, and its recirculation defrost maintains 60% at -25°C. It delivers airflow up to 130 CFM, continuously brings in fresh air, and reduces heating demand in winter and cooling demand in summer, improving occupant comfort. It improves indoor air quality by eliminating allergens, pollutants, and odors, for a healthier indoor environment. With a washable core and filters and no drain required, maintenance stays simple. A great fit for multi-unit buildings and small to medium-sized homes aiming for very high energy performance.

AIR FLOW AND PERFORMANCE

- Air flow 130 cfm at 0.2 in.w.g.
- 75% sensible recovery effectiveness at 0 °C (32 °F) 30 L/s.
- 60% sensible recovery effectiveness at -25 °C (-13 °F) 27 L/s.
- Recirculation defrosts.

VOLTAGE

- 120V, 60Hz, 1.5A, 172W.

BENEFIT

- Reduce heating demand in winter and cooling demand in summer.
- Whisper-quiet: factory calibrated and balanced.
- Easy installation and maintenance.
- Designed and manufactured in Canada to operate in variable climatic conditions.

CONSTRUCTION

- Door and housing in corrosion-resistant galvanized steel, 24-gauge, pre-painted neutral white.
- Convenient, screwless hinged door.
- Ultra-thin: 14 1/8 in. (359 mm).
- Easy installation: 64 lb (29.1 kg).
- No drain required.
- Port size: 5 in. (127 mm).
- Top port model only.
- Merv8 washable filters. Merv13 washable filter in option (SK-FI-M13).

MOTOR

- Energy-efficient, sealed European motor with closed housing and automatic reset thermal protection.
- Balancing without flow keys. 100% electronic adjustment. Pressure ports integrated into the door for precise, easy balancing.

ENERGY RECOVERY CORE

- Polymer counterflow energy recovery core offers high energy efficiency for superior performance.
- Washable in soapy water to recover its full effectiveness without deterioration or contamination.

CONTROL/TIMER

- 2 control choices available:
  - Optional Decora-style wall-mounted control/timer (SA-LT15). INTERMITTENT (20-40) – CONTINUOUS – OFF – Timer (20-40-60 minutes).
  - Optional digital Decora-style wall-mounted control/timer (SA-LCD15). INTERMITTENT (20-40) – CONTINUOUS – Humidity – Recirculation – OFF.

INSTALLATION

- Can be wall-mounted or suspended.
- Set of nylon suspension straps included for installation.
- Fits into a 24 in. (610 mm) deep wardrobe.
- Removable terminal block for connection to a furnace, supplied with the device.

SETTING (AIR FLOW)

- Balance the unit using the supplied instruction.
- All the installer needs are the required flow rates, a manometer, and 5 minutes to adjust and balance the system.
- Simply specify the air flow rates for LOW SPEED and HIGH SPEED.
- The static pressure of the system should ideally be less than or equal to the static pressure indicated by the graph for HIGH SPEED.
- You don't have to worry about static pressure to limit air flow or adding flow keys as other devices. All you must do is provide ducting that doesn't limit maximum flow, and the unit's adjustments will allow you to fine-tune flow rates.

WARRANTY

- Motor 5-year. Other parts except filters and pre-filters 1-year.

APPLICATION

- The ideal solution for high-rise apartments and small to medium-size homes.
- The most efficient energy recovery ventilator on the market. Ideal for projects requiring very high energy performance to benefit from all available credits and subsidies.
- Purifies the air by expelling many pollutants, dust, and allergens to the outside, while ensuring an equivalent supply of fresh air in the home.

Important note

No controls are included with the purchase of an ERV or HRV.
SA-LT15 and SA-LCD15 controls must be purchased separately.

FC_SSKHE130R_EN_091026

°STELPRO

Stelpro reserves the right to modify at any time the description, manufacturing, or price of its products. Additionally, Stelpro may apply restocking fees or refuse a refund based on one or more of the following criteria: optional color, custom product, assembly with low-demand options. For the latest product information and prices regarding the products, please visit the website www.stelpro.com.

TOP PORT MODEL

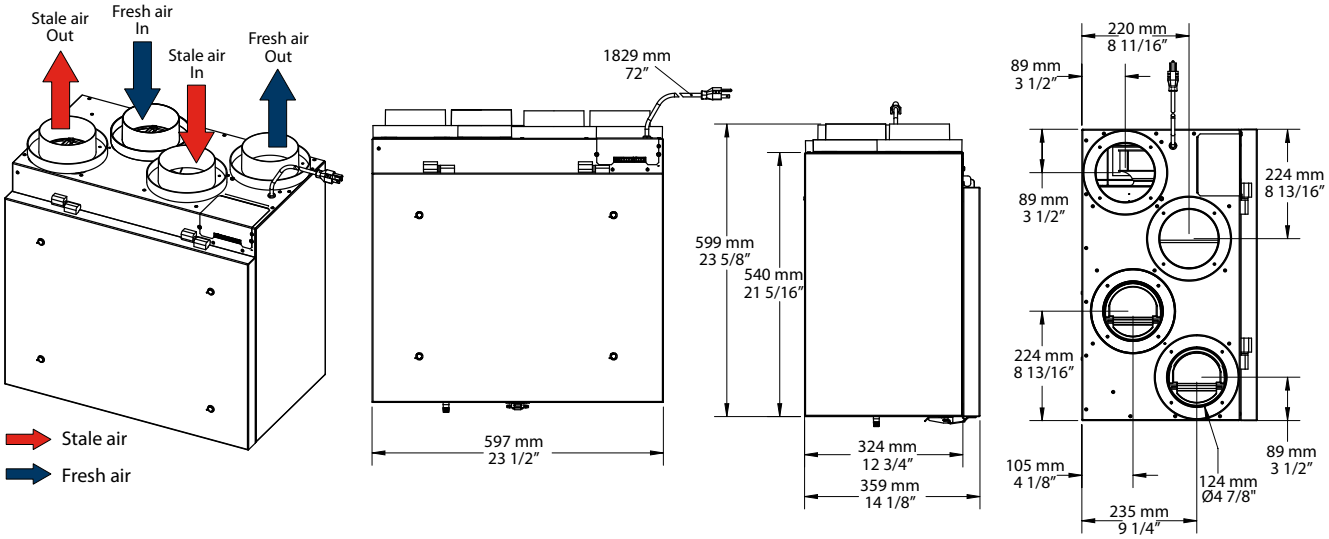

ERV SSKHE130R - CURVES AT HIGHEST SPEED

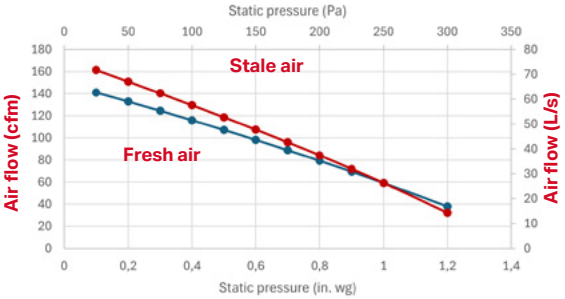

VENTILATION PERFORMANCE AT HIGHEST SPEED

IN. WG (PA)	0.2 (50)	0.3 (75)	0.4 (100)	0.5 (125)
	CFM (L/S)	CFM (L/S)	CFM (L/S)	CFM (L/S)
NET SUPPLY AIR FLOW	129 (61)	121 (57)	113 (53)	104 (49)
GROSS SUPPLY AIR FLOW	133 (62)	124 (58)	116 (54)	107 (50)
GROSS EXHAUST AIR FLOW	151 (71)	140 (66)	129 (61)	118 (56)

ENERGY RATINGS - HVI CERTIFIED

SUPPLY TEMPERATURE		AIR FLOW		POWER	SENSIBLE RECOVERY (SRE)[1]	ADJUSTED SENSIBLE RECOVERY	LATENT RECOVERY / MOISTURE TRANSFER
°C	°F	CFM	L/S	W	%	%	%
Heating							
0	32	49	23	66	78	87	86
0	32	64	30	76	75	84	81
0	32	84	40	92	73	80	77
-25	-13	58	27	82	60	64	72
Cooling					Total recovery efficiency	Adjusted total recovery efficiency	
35	95	64	30	76	68	74	77

MODEL

PRODUCT #	CFM	RECIRCULATION	SRE[1] 0 °C (32 °F) 30 L/S	SRE[1] -25 °C (-13 °F) 27 L/S	PORT		VOLTS	HERTZ	AMP.	WEIGHT	
					IN.	MM				LB	KG
ERV energy recovery ventilator 130 cfm with recirculation Top Port											
SSKHE130RT	130	Oui	75%	60%	5	127	120	60	1.5	64	29.1

[1] SRE: Sensible Recovery Efficiency.

OPTIONS

PRODUCT # KIT	DESCRIPTION
KIT-SA-FI-150	Kit of 2 Merv8 washable filters for ERV 130R and HRV 150R
KIT-SK-DRAIN	Drain connection kit for ERV and HRV
SK-FI-M13	Merv13 washable filter for ERV 130R and HRV 150R

CONTROLS (SOLD SEPARATELY)

PRODUCT #	DESCRIPTION	
SA-LCD15[2]	Digital Decora-style wall-mounted control/timer for residential ERV and HRV	
SA-LT15[2]	Decora-style wall-mounted control/timer for residential ERV and HRV	

[2] Must be purchased separately.

Stelpro reserves the right to modify at any time the description, manufacturing, or price of its products. Additionally, Stelpro may apply restocking fees or refuse a refund based on one or more of the following criteria: optional color, custom product, assembly with low-demand options. For the latest product information and prices regarding the products, please visit the website www.stelpro.com.