TECHNICAL DATA SHEET

SA-LT15[1]

WALL CONTROL

Decora type wall control with timer for residential energy and heat recovery ventilators (ERV and HRV).

[1] Offered in a box (SA-LT15-B) for retail sales.



FEATURES

Designed for standard 2" x 3" electrical boxes.

Integrated high speed timer 20/40/60 minutes.

Decora style wall plate included.

OPERATING MODES

- Intermittent - 20 minutes at low speed 40 minutes standby.
- Continuous - at low speed.
- Timer - 20/40/60 minutes at high speed.
- OFF - does not operate until the unit is restarted by the user.

COMPATIBILITY

Compatible with energy and heat recovery ventilators (ERV and HRV) manufactured as of November 2020.

DIMENSIONS

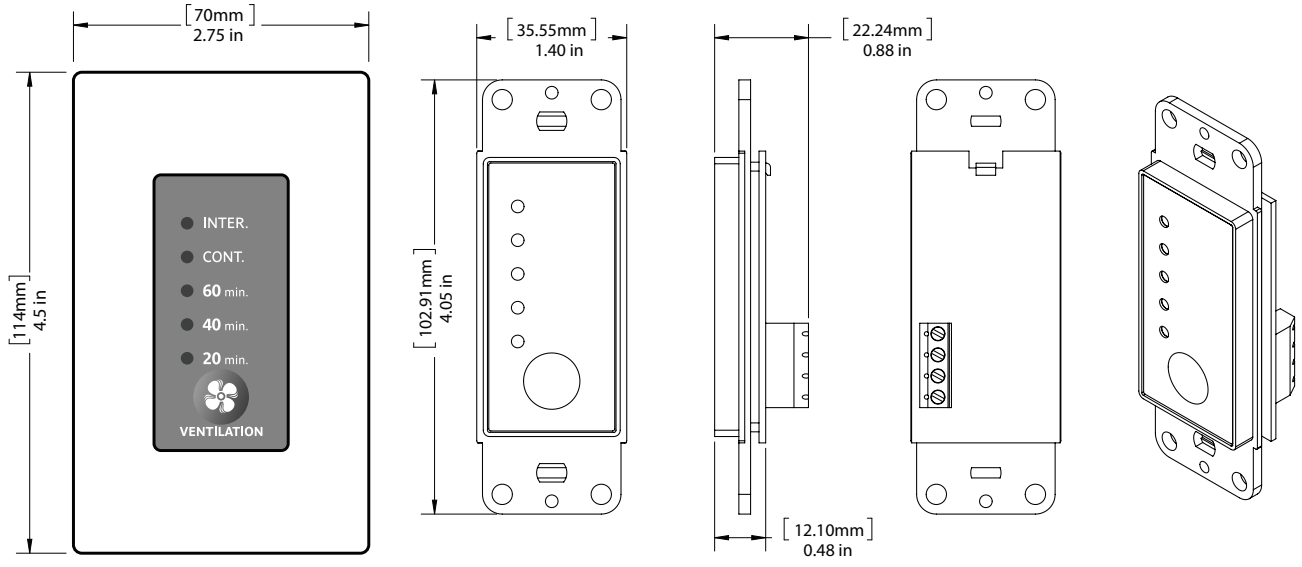

SUPPLIED WALL PLATE | FRONT | SIDE | BACK

OUELLET	innovair		Global Commander	epurair	STELPRO
1 800 463-7043	1 800 567-2733	305 463-9998	1 800 463-7043	1 800 205-1108	1 800 363-3414 (Electricians) 1 866 766-6020 (Consumers)
ouellet.com	dettson.com	innovair.com	globalcommander.ca	epurair.com	stelpro.com