# ORLÉANS™

**OWNER'S MANUAL**

**SOR** HIGH-END CONVECTOR

**SOR... / SOR...WC**
**SORH... / SORH...WC**
**SORL... / SORL...WC**




INS-SOR_0425

THANK YOU FOR YOUR PURCHASE!
QUESTION? PROBLEM? CONTACT STELPRO CUSTOMER SERVICE.

**WWW.STELPRO.COM**
**CONTACT@STELPRO.COM**
**1-844-STELPRO**

zigbee certified product

# IMPORTANT INSTRUCTIONS

Before installing or using this product, you must read and understand these instructions and save them for future reference. The manufacturer will not be held responsible for anything, and the warranty will be void if the installer and user do not follow these instructions.

This product must be installed by a qualified person and connected by a **certified electrician** in accordance with local electrical and building codes.

Failure to follow these instructions could result in personal injury, property damage, serious injury and potentially fatal electrical shock.

Protect the unit with the appropriate circuit breakers or fuses according to the nameplate.

Make sure that the supply voltage (volts) corresponds to that indicated on the nameplate.

**This unit must be grounded. Use copper conductors only.**

Use supply wires suitable for 75°C (167°F).

Switch off the power supply to the unit at the circuit breaker/fuse before installation, repair and cleaning.

Ensure that the unit is designed for the intended use (if necessary, consult the product catalog or a representative).

**Recommended heating capacity: 1.25 W/cubic foot (0.03 m³).**

This corresponds to **10 W/square foot (0.09 m²)** based on a standard ceiling height of **8 feet (2.44 m)**. The recommended capacity is usually sufficient for normal heating needs. Please note that wall and window insulation quality affects heat loss and impacts the power required to heat a room. If necessary, refer to a specialist who can calculate these heat losses and optimize the required capacity or consult the “Online heating calculation” section of the Stelpro Design website (residential buildings). To heat and increase the comfort of a large room, install several units instead of just one. For example, 2 x 1000 W instead of 1 x 2000 W. If the power of the unit is insufficient for the size of the room, it will run continuously, causing it to age prematurely or turn yellow.

Do not install the unit where objects could be heat damaged. **Respect distances and positions indicated** in the installation section of this guide.

If the installer or user modifies the unit in any way, they will be held responsible for any damage resulting from such modification, and the CSA certification may be voided. This unit must not come into contact with any water source and must be protected from splashes (e.g., water from a mop). Do not use it if any part has been submerged. Moreover, do not turn it on or off when your feet are in water or your hands are wet.

When cutting or drilling a wall to install the unit, make sure not to damage the wiring and other hidden utilities.

When the unit is first turned on or turned on after a long period of time, it’s normal for it to temporarily emit some odours and a thin whitish smoke.

Because it heats up, this unit presents risks even when it is operating normally. Therefore, **use caution, good judgment and care** when using it. To avoid burns, do not allow bare skin to come into contact with hot surfaces. Allow the unit to cool down for a few minutes before handling it (it will remain hot for some time).

Leave at least **6 inches (15.2 cm)** of free space between the unit and adjacent surfaces and at least **4 inches (10.2 cm**) from the floor. However, do not allow objects or furniture such as, but not limited to, blankets, towels, bedding, laundry baskets, clothing, papers, etc., to come into contact with the unit and keep them at least **12 inches (30.5 cm)** away from the unit. Moreover, some materials are more heat-sensitive than others, so make sure that those near your appliance can withstand the heat it gives off. Do not install the unit on a wall behind a door. Never block the unit’s air inlets and outlets. Doing so will lead to overheating, which may cause a fire. Do not insert foreign objects into the unit’s air inlets and outlets, as this may damage the unit and cause electric shock or fire.

The unit contains hot and potentially arcing (sparking) parts. It is not intended for use or storage in damp locations or locations containing flammable liquids, combustible materials, and corrosive, abrasive, chemical or explosive materials such as, but not limited to, paint, gasoline, chlorine, sawdust, and cleaning products.

Some areas are dustier than others. The user must therefore assess whether **the unit needs to be cleaned** based on the amount of dirt accumulated on the air inlets and outlets and inside the unit. Accumulated dirt can cause the unit to turn yellow or cause a component to fail. Failure to install and maintain the unit in accordance with these instructions poses a fire hazard. Activation of the thermal protection indicates that the unit has been subjected to abnormal operating conditions. If the thermal protection remains activated or repeatedly activates and deactivates, the unit should be inspected by a qualified electrician or a recognized repair centre to ensure that it is not damaged (refer to the limited warranty terms beforehand).

If the unit is damaged or defective, turn off the power supply at the circuit breaker/fuse and have it repaired at an authorized service centre (refer to the limited warranty terms beforehand).

## SAVE THESE INSTRUCTIONS

# INSTALLING THE CONVECTOR

**TO ENSURE A SAFE AND EASY INSTALLATION, TAKE A FEW MINUTES TO READ THIS INSTALLATION GUIDE.**

## WHAT'S IN THE BOX THE BOX

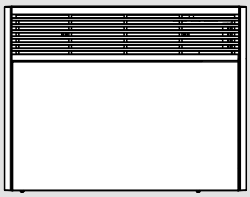

Convector

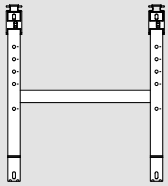

Wall bracket



Twist-on wire connectors

## TOOLS AND MATERIAL REQUIRED

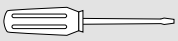

⏀ Flat screwdriver

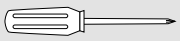

⊕ Phillips screwdriver

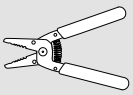

Wire stripper

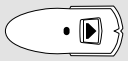

Stud finder



Level



Tape measure



Four to six #6 to #10 round-head wood screws and suitable anchors to secure the convector (see weight on package) to the type of wall

**WARNING: This convector must be installed by a certified electrician according to the electrical and building codes effective in your region.**

## 1 WHERE TO INSTALL YOUR CONVECTOR

**ATTENTION: To avoid the risk of overheating and fire, leave a clearance of at least 12 in. (30.5 cm) in front of the convector, 6 in. (15.2 cm) on each side and 4 in. (10.2 cm) of space from the floor.**

**Do not allow objects or furniture such as, but not limited to, blankets, towels, laundry baskets, clothing, papers, etc., to come into contact with the convector and keep them at least 12 inches (30 cm) away.**

**The unit is not intended for use or storage in locations that are wet or contain flammable liquids, combustible materials, and corrosive, abrasive, chemical or explosive materials such as, but not limited to, paint, gasoline, chlorine, sawdust, and cleaning products.**

**No electrical outlets may be located within the housing's enclosure, as interference may occur.**

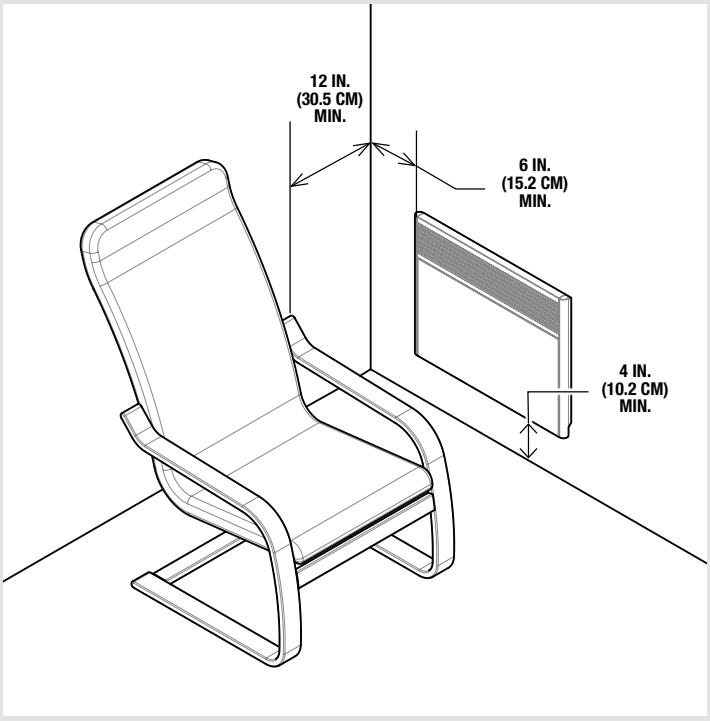

## 2 TURN OFF THE POWER SUPPLY

To protect yourself from the risk of electric shock, turn off the power to the power cables at the electrical panel.

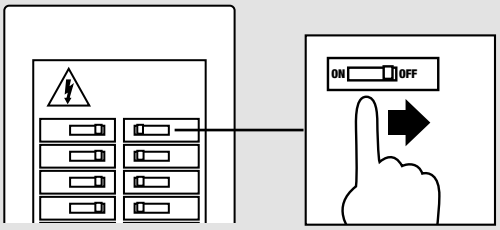


## 3 REMOVE THE WALL BRACKET FROM THE UNIT

1. Lay the unit flat on a clean, non-abrasive surface to avoid damaging the front of the unit.
2. Press down on each spring with a screwdriver.
3. Swivel the bracket upwards.
4. Remove the bottom hooks from the unit.

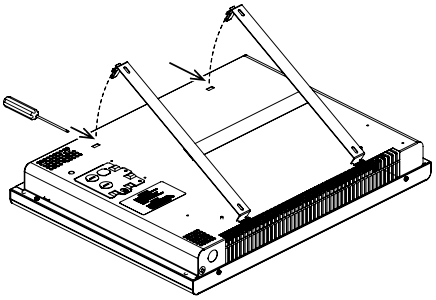

## 4 PREPARING THE SURFACE FOR INSTALLATION

**NOTE: The wall where you install the unit must be as flat as possible to ensure a secure and sturdy connection between the unit and the bracket. It is very important to follow this guideline to avoid damaging the bracket during installation. This could cause the locking system to malfunction.**

1. Using the stud finder, locate studs and other structures that may be inside the wall.
2. To determine where to install the unit on the wall, use the wall bracket as a guide. For a sturdier installation, align one side of the wall bracket with a stud as shown in the illustration.
3. For simplified installation, place the bracket on the floor, in front of the wall where the unit will be installed, and mark the holes **[A]** according to the desired installation height (minimum 10.2 cm [4 in]).

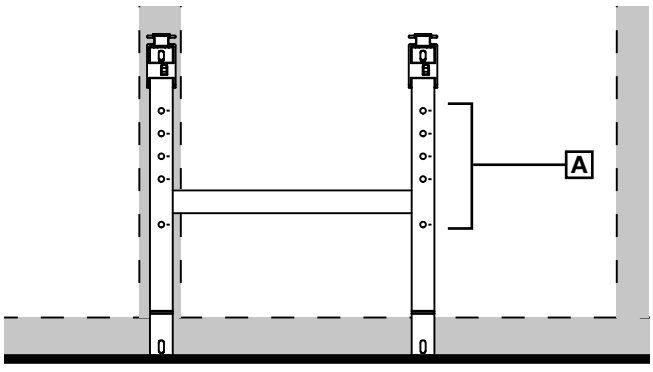


4. Align the marks with the slots **[B]** at the bottom of the wall bracket and mark the location for the top screws **[C]**. Make sure the wall bracket is level.

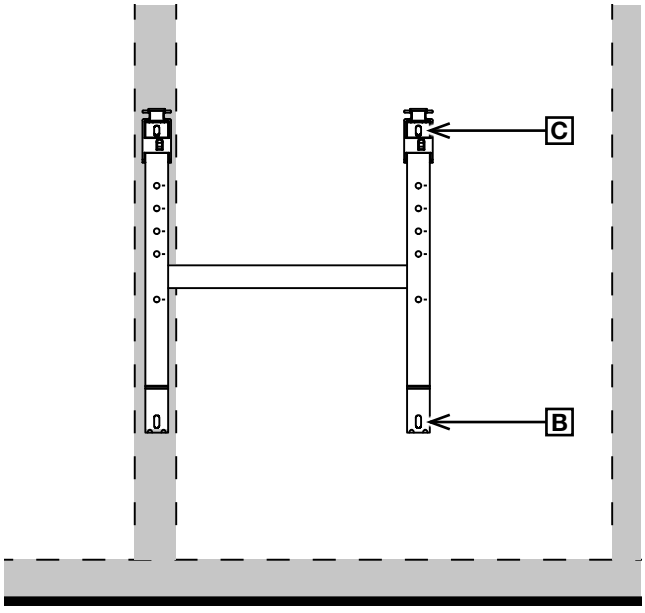

5. Install the appropriate anchors to secure the convector (see weight on the packaging) according to the type of wall, then screw* the bracket in place.

**WARNING: When drilling the wall, be careful not to damage electrical wiring and other hidden utilities.**

6. Pull the power cable out of the wall. Allow extra cable to easily connect the unit's wires.

## 5 CONNECTING THE WIRING

**WARNING: Use only copper wire that can withstand a temperature of 75°C (167°F).**

1. Unscrew and remove the junction box door and set it aside.
2. Pull the wires out of it.

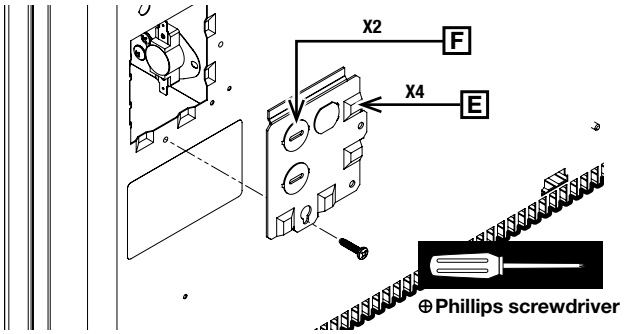


3. If necessary, strip the wires from the power cable **[A]** using a wire stripper.
4. Connect the bare wire (ground) to the green wire **[B]** using one of the supplied twist-on connectors **[C]** (see connection diagram).
5. Then connect the convector **[D]** and power supply wires in the same way with the two other twist-on connectors. Tighten them on the wires to ensure each connection is secure.
6. Then place all the wires in the junction box, taking care to place the cable in one of the clearances provided **[E]**.

**NOTE:** If installing in a knockout **[F]**, use a wire clamp to secure the power cable. Replace the junction box cover and insert the screw to hold it in place.

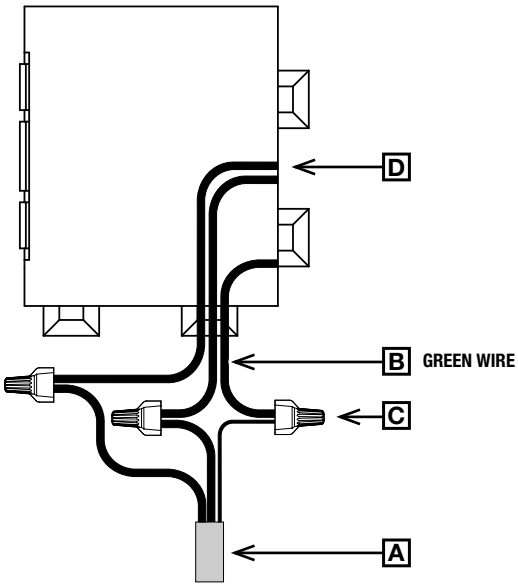


**CONNECTION DIAGRAM**

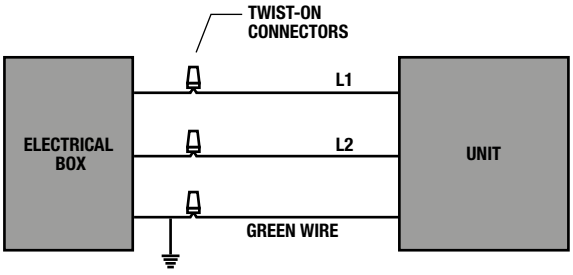


**ELECTRICAL DIAGRAM OF THE DEVICE**

## 6 HANG THE UNIT ON THE WALL BRACKET

**CAUTION: Ensure that the convector is correctly engaged in the wall bracket to avoid dropping and damage.**

1. Insert the unit into the lower hooks **[A]** of the wall bracket.

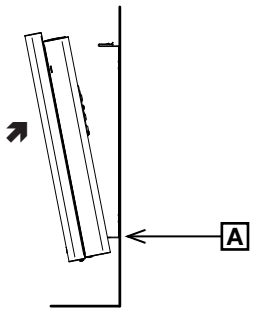


2. Tilt the top of the unit and snap it into the top hooks.

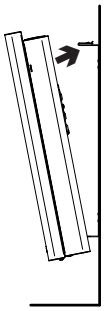

3. Push the unit to ensure it is firmly seated. **[B]**

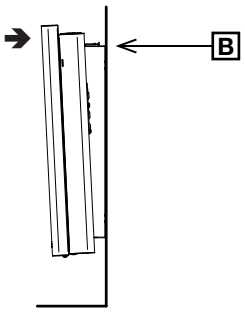


## 7 TURNING THE POWER BACK ON

1. Restore power back to the convector. Make sure that the unit works by raising the temperature until it starts to heat.
2. See the **Using the convector** section to get the most out of your unit.

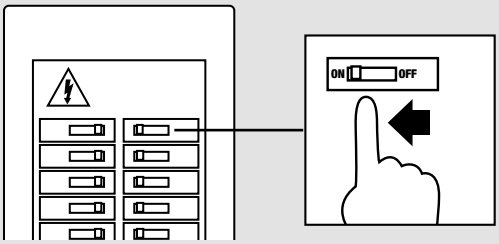


# USING THE CONVECTOR

**WARNING: Before using your convector, make sure that it has been installed by a certified electrician in accordance with the electrical and building codes in effect in your area. Before using the unit, make sure both the air inlet (bottom) and air outlet (front) are not obstructed.**

### CONVECTOR CONTROL

Depending on the model you've chosen, refer to the table below for information on how to control the convector.

| | | |
|---|---|---|
| **SOR..., SORH..., SORL...** | These models are controlled using a **built-in thermostat** to adjust the room temperature setpoint **(see page 7 for details)**. |  |
| **SOR/H/L...WC** | This model is controlled by a **wall-mounted thermostat** to adjust the room temperature setpoint. | --- |

## BUILT-IN THERMOSTAT INTERFACE

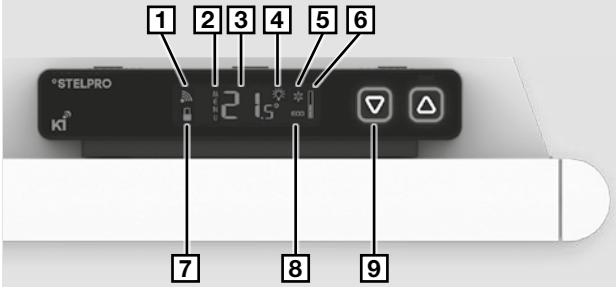


1. Zigbee connectivity icon.
2. **MENU** Advanced menus indicator.
3. Ambient room temperature.
4. BACKLIGHTING menu indicator.
5. Icon indicates a freezing risk either due to a low setpoint, if the thermostat is set to OFF or if an open window is detected.
6. Heating power segments.
7. Control lock icon.
8. ECO The unit will respect the ECO mode setpoint for the duration as configured and once the duration has elapsed it will return to COMFORT mode.
9. ▽ △ Buttons used to raise or lower the temperature setpoint. Also used to navigate the advanced menus.

## BUILT-IN ELECTRONIC THERMOSTAT FOR SMART HOMES (ST218)

| BUTTON FUNCTIONS | | |
|---|---|---|
| **BUTTONS** | **DISPLAY** | **ADVANCED MENUS** |
| Single button | Adjustment of temperature setpoint | Navigation and editing of parameters |
| Both buttons simultaneously | Mode selection (comfort, eco, off) | Selection and confirmation of parameters |
| Both buttons held simultaneously for 3 seconds | Access to advanced menus | Exit from advanced menus |

| BUTTON COLORS | |
|---|---|
| **BUTTON COLORS** | **CONVECTOR CONDITION** |
| **Green** | Normal operation, economical temperature setpoint |
| **Between green and red** | Normal operation, the color reflects how economical the temperature setpoint is; more green is more economical and more red is less economical. |
| **Red** | Normal operation, high temperature setpoint |
| **Blue** | Convector in off mode |
| **Flashing blue** | Open window detected |
| **White** | While in advanced menus |
| **Gray** | When the backlighting is set to off and the buttons remain inactive for more than 15 seconds |

### ADJUSTING THE TEMPERATURE SETPOINT

By pressing either button on the thermostat, the temperature setpoint will be displayed as flashing digits.

The temperature setpoint is set by using the UP ( ▲ ) or DOWN ( ▼ ) buttons to raise or lower the setpoint respectively by increments of 0.5 °C (1 °F) each time the buttons are pressed. Holding down either button will allow you to scroll more quickly to the desired temperature setpoint.

Once the desired setpoint has been selected, release the button. This setpoint will remain in memory for the current mode (COMFORT or ECO ( ECO ) – see next section for details). The display will stop flashing after 3 seconds and will then display the ambient temperature in the room.

In order to sensitize the user about energy consumption, the color of the contour around the buttons will change according to the setpoint selected; green being a lower setpoint and red being a higher setpoint.

**Note #1**: In OFF mode, the setpoint displayed is ( -- ) and the ( ❄ ) icon is displayed indicating that there is a potential risk of freezing. In this mode, it is not possible to modify the setpoint. If a new setpoint is sent from the smart home controller while the convector is in OFF mode, the thermostat will return to COMFORT mode.

**Note #2**: The setpoint in ECO mode is local to the convector. In other words, its setpoint cannot be set by the smart home controller. If a new setpoint is sent via the smart home controller while the convector is in ECO ( ECO ) mode, the thermostat will return to COMFORT mode.

**Note #3**: If a setpoint change is sent by the smart home controller, the display will flash this setpoint on the thermostat for 3 seconds and then return to normal.

## SELECTING THE OPERATION MODE

There are three (3) operation modes: COMFORT mode, ECO mode (identified by the ( ECO ) icon) and OFF mode (identified by the ( ❄ ) icon). To switch from one mode to another, simply press and then release both buttons simultaneously

**Note #1:** If the operation mode is changed remotely by the smart home controller, the setpoint (or ( -- ) when in OFF mode) will be displayed for 3 seconds and will then return to normal.

**Note #2:** Once the ECO mode has been selected, the convector will respect the ECO mode setpoint for the duration as configured (see ECO MODE DURATION section for details). Once the duration for ECO mode has elapsed (unless OFF is selected), the convector will automatically return to COMFORT mode.

## THERMOSTAT DISPLAY

- Ambient room temperature (or the setpoint when flashing)
- Operation mode: COMFORT, ECO (ECO), OFF ( ❄ )
- The ( ❄ ) icon indicates a freezing risk either due to a low setpoint or if the thermostat is set to OFF. This icon will flash if an open window is detected.
- The status of the connectivity with the ZigBee ( ) network.
- The ( 🔒 ) is displayed when the controls are locked. See LOCKING THE CONTROLS for details.
- The thermostat displays the percentage of heating time required to maintain the desired temperature:



0 segments: 0%
1 segment: 1-25%
2 segments: 26-50%
3 segments: 51-75%
4 segments: 76-100%

## ZIGBEE CONNECTIVITY

This convector is compatible with the ZigBee smart home protocol. Once connected, it can be controlled remotely by means of the application included with the user's ZigBee controller.

**Follow these steps to connect your convector to a ZigBee network:**

1. Make sure that the ZigBee controller is in association mode
2. Access the advanced menus
3. Select menu 1 ( )
4. If ON is selected, the convector will find the channel assigned to the ZigBee network. You can also manually specify the channel that your ZigBee controller is currently using. The ZigBee connection process will be faster if the ZigBee channel is manually specified.
5. During the association, your selection will flash rapidly and the connectivity icon ( ) will be animated

Once the association with the ZigBee network has been established, the channel number will be shown on the display

If an error occurs during association, (ERR) will be displayed for 3 seconds followed by (OFF) being displayed

**Follow these steps to disconnect your convector from the ZigBee network:**

1. Access the advanced menus
2. Select menu 1 ( ) and change the parameter to (OFF)

During the disassociation, (OFF) will flash rapidly and the connectivity icon ( ) will be animated

Once the disassociation with the ZigBee network has been completed, (OFF) will be displayed

If an error occurs during disassociation, (ERR) will be displayed for 3 seconds followed by the channel number being displayed.

## TEMPERATURE FORMAT

The temperature can be displayed in either degrees Celsius or Fahrenheit.

**Follow these steps to select the temperature format:**

1. Access the advanced menus
2. Select menu 2, select either °C or °F

## DISPLAY BACKLIGHTING

Both the display backlighting as well as the lighted control buttons can be configured. When either button is pressed, the buttons are lit with a color and the display will be at 100% brightness.

If no button is pressed for 15 seconds, the display can behave in one of three ways:

See **BUTTONS COLORS** table for more details

1. **ALL:** The display backlighting is active but dimmed. The button contours remain colored
2. **BTN :** The backlighting is off. The button contours remain colored.
3. **OFF :** The backlighting is off. The button contours are colored light gray

**Configure the backlighting and button behavior**

1. Access the advanced menus
2. Select menu 3 ( ), select either ALL, BTN or OFF

**NOTE: The display backlighting and the button contours will be at 100% intensity if a problem is detected with the ZigBee communication or if a window is open.**

## LOCKING THE CONTROLS

This mode allows you to lock the controls in order to prevent unwanted changes to the setpoint and/or operation modes.

While the ( ) icon is displayed, only changes sent by the ZigBee controller are possible.

**NOTE: The advanced menus remain accessible at all times.**

**Follow these steps to activate or deactivate the control lock:**

1. Access the advanced menus
2. Select menu 4 ( ) and select either (ON) or (OFF)

## OPEN WINDOW DETECTION

This convector can detect an open window in the room and lower the setpoint so as not to waste energy.

When the convector detects an open window in the room, the ( ) icon will flash and the button contours will flash in blue. The setpoint will be automatically set to 7 °C (45 °F).

Once the convector detects that the window has been closed, the setpoint will return to its previous setting.

**Follow these steps to activate or deactivate the open window detection:**

1. Access the advanced menus
2. Select menu 5 ( ) and select either (ON) or (OFF)

### ECO MODE DURATION ECO

By default, the ECO ( ECO) mode duration is set to (OFF). In other words, the mode selection is permanent and the convector will remain in ECO mode unless another mode is manually selected or selected remotely by the smart home controller.

**Follow these steps to modify the duration of the ECO ( ECO ) mode:**

1. Access the advanced menus
2. Select menu 6 ( ECO )

**Select the duration from the values available ranging from:**

- 1-12 hrs, in one hour increments
- 14 hrs
- 16 hrs
- 18 hrs
- 1-7 days, in one day increments

### °STELPRO MENU

Information about the convector is available in this menu. It is also possible to reset the convector to its factory settings (menu 7.7).

**Follow these steps to access this information:**

1. Access the advanced menus
2. Select menu 7

**Select one of the following sub-menus:**

- **7.1:** Version of convector
- **7.2:** Version of ZigBee 'radio'
- **7.3:** Day manufactured
- **7.4:** Month manufactured
- **7.5:** Year manufactured
- **7.6:** Internal control code
- **7.7:** Factory reset of convector

### FREEZE PROTECTION ❄

The ( ❄ ) icon will be displayed when the thermostat is adjusted between 5 °C (41 °F) and 7 °C (45 °F) and indicates that the ambient room temperature will not drop below the freezing point.

### OFF MODE (OFF)

See the SELECTING THE OPERATION MODE section for procedure to activate the OFF mode.

**NOTE: There is still voltage present in the convector and there is a risk of electric shock even if the OFF mode is activated. Always switch the circuit breaker off prior to servicing or cleaning the convector.**

**The convector will NEVER heat when in OFF mode. A freeze risk is present when the OFF mode is activated.**

### FACTORY RESET

Follow these steps to reset the convector to its factory settings:

1. Access the advanced menus
2. Select menu 7
3. Select sub-menu 7.7. Confirm selection when (DEF) is displayed
4. Select (YES) and confirm the selection. (YES) will blink for few seconds and the convector will be reset to its factory settings.

# TROUBLESHOOTING

The following table lists the most common problems and alerts you may encounter with your convector.

If your problem isn't listed in the table below or the proposed solution does not solve the problem, turn off the power and contact our customer service team

WWW.STELPRO.COM
CONTACT@STELPRO.COM
**1-844-STELPRO**

| PROBLEM/ALERT | POSSIBLE CAUSES AND SOLUTIONS |
|---|---|
| **The unit doesn't start up** | • Open circuit breaker or fuse<br>• Thermal protection activated<br>• Incorrect connection |
| **The unit runs continuously** | • Faulty or incorrectly adjusted thermostat/timer |
| **The housing is extremely hot** | • Faulty thermal protection<br>• Blocked air inlet and/or outlet |
| **The desired room temperature cannot be reached** | • One or more components are defective<br>• Faulty or incorrectly adjusted thermostat/timer<br>• Voltage lower than that indicated on the nameplate<br>• Heat losses in the room greater than the unit's capacity |
| **The unit cycles on thermal protection (unit overheating)** | • Blocked air inlet and/or outlet |
| **The circuit breaker trips when the unit is switched on** | • Incorrect connection<br>• Voltage higher than that indicated on the nameplate |
| **The unit does not heat up** | • One or more defective components |
| **The connectivity icon ( ) is flashing on the display** | • There is a problem with the ZigBee 'radio'. Reinitialize the convector. |
| **The temperature setpoint and/or the operation mode cannot be modified** | • The unit is locked. Deactivate the control lock ( ) |

| ERROR CODE | DEFINITION |
|---|---|
| **LO** | Temperature lower than 0 °C (32 °F), the unit will always heat unless set to OFF |
| **HI** | Temperature higher than 50 °C (122 °F), the unit will never heat |
| **--** | • If displayed in place of the temperature setpoint: OFF mode activated, heating not possible<br>• If displayed in place of the ambient temperature: defective temperature probe, heating not possible. Call customer service for assistance. |
| **Err** | The connection to the ZigBee network has failed. Ensure that the unit is within range of the ZigBee controller and that it is in ASSOCIATION mode. |
| **E1** | Defective auxiliary temperature probe. The unit will still control the temperature, but the performance of the thermostat may be diminished. Call customer service for assistance. |

# MAINTAINING THE CONVECTOR

**NOTE: For the warranty to be valid, the fan heater's air inlet and outlet must be cleaned regularly. Over time, cigarette smoke may cause the outlet grill to yellow. The best way to prevent yellowing is to clean the unit regularly.**

**WARNING: The unit is powered even if the thermostat is in the off position. You could therefore receive an electric shock as long as the unit is powered. Switch off the power supply at the circuit breaker/fuse before cleaning the unit.**

Remove dust from the unit with a soft cloth. Clean only with a damp cloth. Do not use any cleaning products to avoid yellowing of the unit. Do not use chemical or abrasive cleaning agents, as they may damage the unit's coating. If the unit is in a very dusty place, use the dusting brush of a vacuum cleaner to remove dust and other foreign objects from the unit.

**NEVER USE:**

- Chlorine
- A metal brush or scouring pad
- Cleaning products that contain abrasives
- Cleaning products that bear the following symbols:



# STELPRO LIMITED WARRANTY

This limited warranty is offered by STELPRO DESIGN Inc. ("STELPRO") for the following STELPRO manufactured product and model: **SOR. Please read this limited warranty carefully.** Subject to the terms of this warranty, STELPRO warrants its products and their components against defects in material and workmanship for the following periods from the date of purchase: **5 years (3 years on electronic components)**. This warranty applies **to the original purchaser** only; it is not transferable and cannot be prolonged or extended.

## CLAIM PROCEDURE

If at any time during the warranty period the unit becomes defective, you must cut off the power supply at the main electrical panel and contact 1) your installer or distributor, 2) your service center or 3) STELPRO's customer service department, who will advise you on the procedure to follow. In all cases, you must have a **copy of the invoice** and provide the **information listed on the product nameplate**. STELPRO reserves the right to inspect or have inspected any product or part before honouring a claim. STELPRO also reserves the right to replace the unit, refund the purchase price, or repair or have repaired a defective part. Please note that repairs made within the warranty period must be authorized in advance in writing by STELPRO and carried out by a person authorized by STELPRO.

Before returning a product to the STELPRO plant, you must have a Stelpro authorization number (RMA). To obtain it, call the customer service department at: **1-844-STELPRO**. The authorization number must be clearly written on the parcel or it will be refused.

## CONDITIONS, EXCLUSIONS AND DISCLAIMERS

This warranty is exclusive and in lieu of all other representations and warranties (except of title), expressed or implied, and Stelpro expressly disclaims and excludes any implied warranty of merchantability or implied warranty of fitness for a particular purpose.

Stelpro's liability is limited to what is provided in this warranty. Stelpro shall not be subject to any other obligation or liability whatsoever, whether based on contract, tort or other theories of law, with respect to goods or services furnished by it, or any undertakings, acts or omissions relating thereto. Without limiting the generality of the foregoing, Stelpro expressly disclaims any liability for property damage or personal injury; penalties; special or punitive damages; loss of profits or use; cost of capital; cost of replacement products, facilities or services; shutdowns; downtime; and any other type of pecuniary loss. Stelpro also declines any responsibility for claims from customers or any other third party for such damages. Furthermore, Stelpro refuses to take responsibility for any indirect, incidental and possible damage of any kind.

This warranty does not cover damage or breakage resulting from 1) improper installation or storage; 2) misuse, abuse, misapplication, lack of maintenance, improper servicing (other than that intended by STELPRO) or use other than that for which the product was designed; 3) an act of God or an event beyond STELPRO's control, including, but not limited to, hurricane, tornado, earthquake, terrorist attack, war, power surge, flood, water damage, etc. This warranty does not cover any accidental or intentional losses or damages, nor does it cover damages caused by negligence of the user or owner of the product. Moreover, it does not cover the cost of disconnection, transport, and installation.

This warranty is limited to the repair of the unit, its replacement or the reimbursement of its purchase price **at the discretion of STELPRO**. Parts that are replaced or repaired with STELPRO's written authorization within the warranty period will themselves be warranted for the remaining warranty period of the original part. This warranty will not be valid and STELPRO may deny any claim if the unit has been **modified in any way** without STELPRO's prior written authorization or if the numbers displayed on the nameplate have been removed or altered. This warranty does not cover scratches, dents, corrosion or discoloration caused by excessive heat, chemical cleaning products or abrasive agents. It also does not cover damage or breakage during shipping.

Some states and provinces do not allow the exclusion or limitation of incidental or consequential damages, and some of them do not allow limitations on how long an implied warranty lasts, so these exclusions or limitations may not apply to you. This warranty gives you specific legal rights, and you may have other rights which vary from state to state or from province to province.

**STELPRO DESIGN INC.**
Saint-Bruno-de-Montarville, Quebec, Canada, J3V 6L7