USER MANUAL

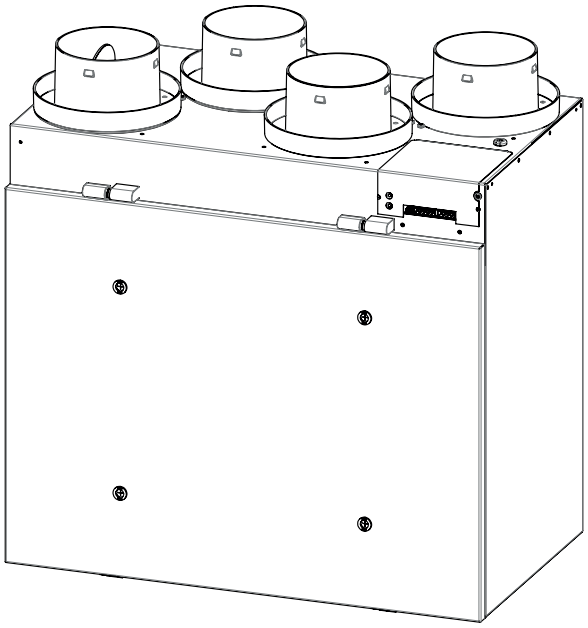

Heat Recovery Ventilator (HRV)		Energy Recovery Ventilator (ERV)	
OSKHH150R	OSKHH150RC	OSKHE130R	OSKHE130RC
ISKHH150R	ISKHH150RC	ISKHE130R	ISKHE130RC
SSKHH150R	SSKHH150RC	SSKHE130R	SSKHE130RC
ESKHH150R	ESKHH150RC	ESKHE130R	ESKHE130RC

ENERGY STAR

This product earned the ENERGY STAR® by meeting strict energy efficiency guidelines set by Natural Resources Canada and the US EPA. This product meets ENERGY STAR requirements only when used in Canada.

READ AND SAVE THESE INSTRUCTIONS

Designed and
manufactured in Canada.

324-A00014_2026-09_02

TABLE OF CONTENTS

CONGRATULATIONS 3

THE QUALITY OF THE AIR IN HOMES TODAY 4

TETHER STRAPS FASTENING 4

VENTILATION SYSTEM CONFIGURATION 5

CONNECTING THE AIR EXCHANGER 6

1. Installation and Connection of Exterior Vents 6

2. Installation of Interior Diffusers 7

3. Connecting the Pipes to the Air Exchanger 8

4. Drain Connection (HRV Only) 8

CONTROL(S) CONNECTION 8

INITIAL BALANCING PROCEDURE 9

BALANCING HRV 150 CFM 10

BALANCING ERV 130 CFM 11

USE 12

CONTROL-TIMER (SA-LT15) 12

Features 12

Operating Modes 12

Compatibility 12

Mode Change 12

Extended Absence (Machine Off) 12

DIGITAL WALL CONTROL (SA-LCD15) 13

Features 13

Operating Modes 13

Compatibility 13

Economic Mode 13

Continuous Mode 14

Humidity Mode 14

Recirculation Mode 15

Extended Absence (Machine Off) 15

MAINTENANCE SCHEDULE 16

FILTER REPLACEMENT AND CLEANING 16

HEAT RECOVERY CORE 17

CONDENSATE DRAIN INSPECTION (IF APPLICABLE) 17

LIMITED GUARANTEE 17

NOTES 18

CUSTOMER SERVICE 20

CONGRATULATIONS

Congratulations on purchasing your new indoor air quality system. This is a high-quality ventilation system designed to provide years of reliable service.

By following the operating and maintenance recommendations in this manual, your system will improve the indoor air quality of your home for many years to come.

SAFETY PRECAUTIONS



WARNING - WHEN USING ELECTRICAL PRODUCTS, BASIC SAFETY PRECAUTIONS SHOULD ALWAYS BE FOLLOWED, INCLUDING THE FOLLOWING:

- Use this unit only for its intended purpose as described in this manual. If you have any questions, contact the manufacturer.
- Always disconnect the unit before servicing or replacing filters.
- Do not operate the unit if the power cord is damaged. Return the unit to an authorized service provider or the manufacturer.
- Do not run the power cord under carpeting.
- Do not place objects on the power cord.
- Do not route the power cord beneath furniture or appliances.
- Ensure that the cord is positioned to prevent tripping hazards.
- Do not damage, pull, twist, or bend the power cord.
- Never handle the plug or the unit with wet hands.
- Do not modify the power cord.
- Do not use extension cords.
- Avoid unplugging the unit by pulling on the power cord.
- Do not block the air inlets or outlets.
- Do not place objects on top of the unit or allow anyone to sit on it.
- Operate the unit in a well-ventilated area.
- Do not use outdoors.
- Do not use near flammable gases or chemicals.
- Do not expose the unit to rain or excessive moisture.
- Do not use this unit near water.
- Ensure all filters are properly installed before operating the unit.
- Do not allow this unit to be used as a toy.



WARNING - TO REDUCE THE RISK OF FIRE OR ELECTRIC SHOCK, DO NOT USE THIS FAN WITH ANY SOLID-STATE SPEED CONTROL DEVICE (DIMMER).

THE QUALITY OF THE AIR IN HOMES TODAY

Homes today are built to be as energy efficient as possible. To prevent heat loss, newer homes are more airtight. This reduces the cost to heat a house but in effect, it lowers indoor air quality. Regardless, in any home, new or old, indoor air quality is typically 2 to 5 times more polluted than outdoor air.

The HRV/ERV system is specifically designed to bring fresh air while recuperating the heat from the airflow (HRV/ERV) and the energy contained in the moisture of your home (ERV only).

TETHER STRAPS FASTENING

Use the 4 adjustable straps (provided) to suspend unit at its location.

Use 4 machine screws and washers and screw into each of the pre-drilled holes located on each side of the unit at the 4 upper corners (shown on the illustration).

Level the unit once it is in its final position.

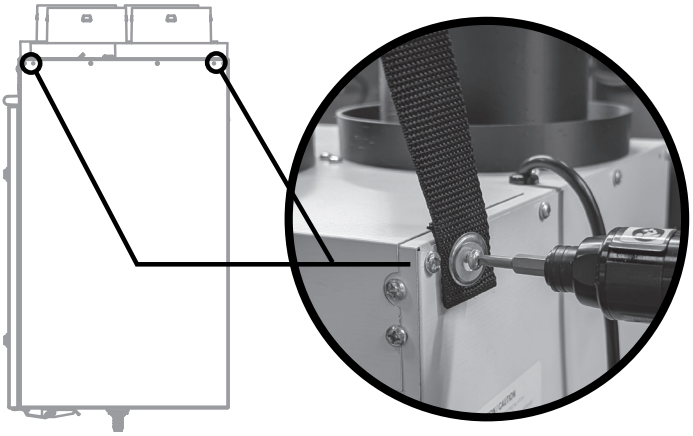

VENTILATION SYSTEM CONFIGURATION

For configurations where the HRV/ERV and HVAC systems are integrated, use the synchronization diagrams with a furnace on page 8.

HRV/ERV alone

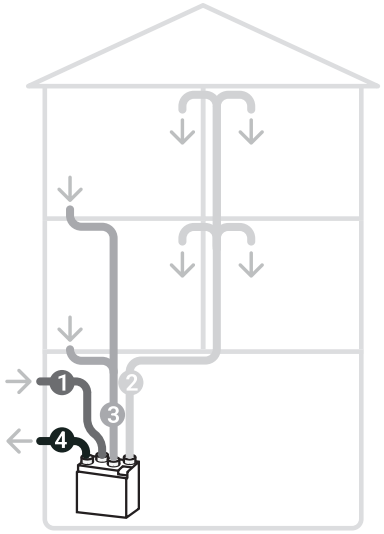

HRV/ERV and HVAC indirectly ducted

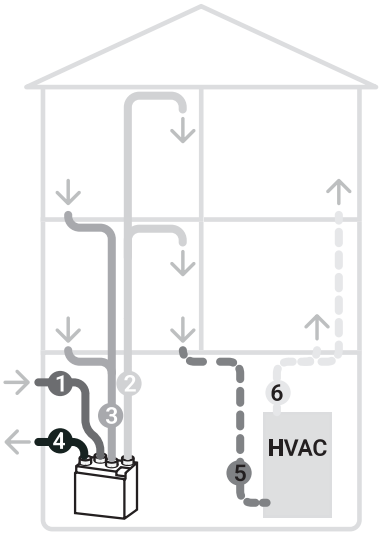

HRV/ERV and HVAC partially ducted

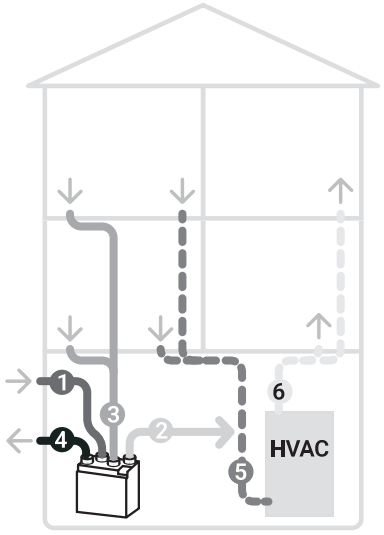

HRV/ERV and HVAC fully ducted

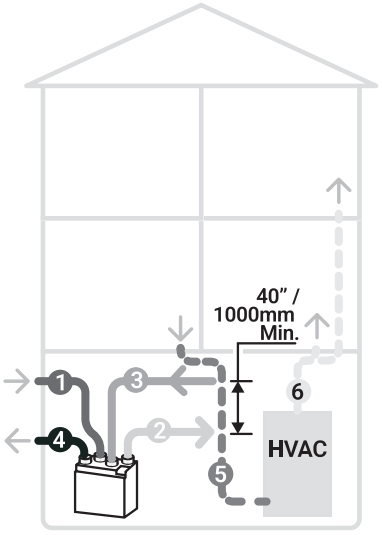

Legend

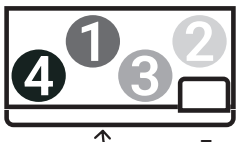

Front of device

Top view

- ❶ **Exterior fresh air inlet**
- ❷ **Interior fresh air outlet**
- ❸ **Interior stale air inlet**
- ❹ **Stale air outlet**
- ❺ **HVAC stale air***
- 6 **HVAC fresh air***

***If applicable**

CONNECTING THE AIR EXCHANGER

IMPORTANT

Use 5 in. diameter ventilation ducts.

Ducting has a strong effect on the air flow, noise and energy use of the fan. Use the shortest, straightest duct routing possible for best performance, and avoid installing the fan with smaller ducts than recommended. Insulation around the ducts can reduce energy loss and inhibit mold growth. Fans installed with existing ducts may not achieve their rated air flow.

1. INSTALLATION AND CONNECTION OF EXTERIOR VENTS

1.1 Cut the two openings between the exterior wall studs

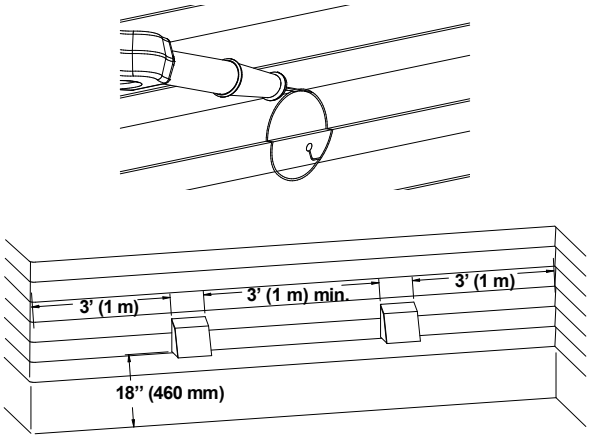

The air inlet vent must be located upstream of the prevailing winds from any other exhaust vent.

Minimum distance of 3 ft. (1 m) from dryer vents and boiler exhaust (medium or high efficiency boilers), inlets, oil fill pipes, gas meters and trash cans.

Do not place them in a garage, attic, crawl space or under a terrace.

1.2 Insert the vents into the openings. A vent with a non-return damper must be used for the stale air outlet.

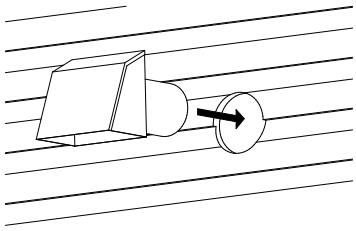

1.3 For each conduit connecting the outside to the inside, use insulated flexible duct. Pull back the insulation to expose the flexible duct.

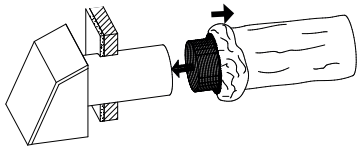

1.4 Secure the flexible conduit using a nylon tie-wrap. The pipe should be attached as close to the wall as possible.

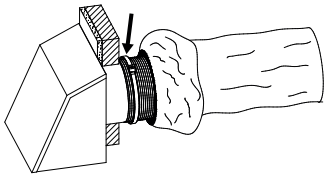

1.5 Pull the insulation over the flexible conduit. Pull the vapor barrier over the insulation:

The insulation must remain intact, not be compressed in any way and not be damaged.

The exterior covering of the insulation, which acts as a vapor barrier, must be sealed to the exterior wall with exterior caulk (ideally soundproof) or ventilation adhesive tape.

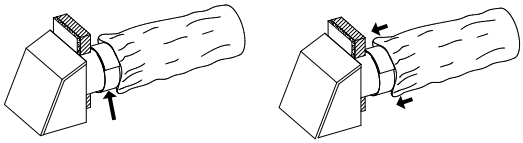

1.6 Gently cover the joint with ventilation adhesive tape until completely sealed.

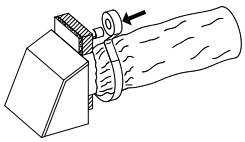

1.7 Seal the vents using exterior caulk

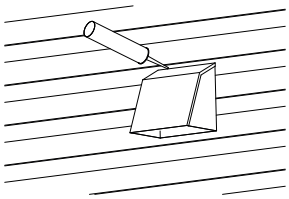

2. INSTALLATION OF INTERIOR DIFFUSERS

2.1 Cut openings in the ceiling or at the top of the walls.

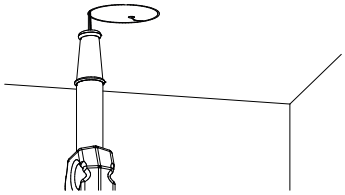

2.2 Location of exhaust grilles

Exhaust stale air from areas where the worst air quality problems occur: the bathroom, kitchen and laundry room.

Additional return air ducts from strategic locations can also be installed.

2.3 Location of supply grilles

Fresh air should be supplied to all habitable rooms from high locations on the wall or ceiling.

SAFETY PRECAUTIONS

⚠ In accordance with building codes and installation requirements for combustion appliances: return air ducts, or openings for return air, must not be located in enclosed areas containing combustion appliances that may leak.

2.4 Use non-insulated flexible conduits to connect the indoor fresh air supply as well as the stale air intake from the house:

The conduits must be as short as possible and have as few folds and curvatures as possible.

2.5 Pass the flexible ducts through the walls and/ or floors to where the diffusers are located.

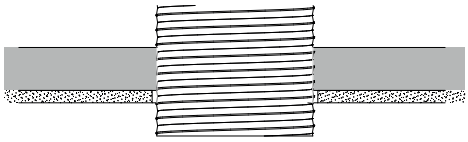

2.6 Secure the flexible pipe to the diffuser collar using a nylon tie-wrap. Cover the joint with ventilation tape to ensure a tight seal.

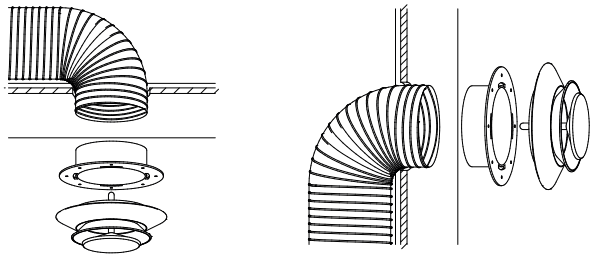

2.7 Push the pipe completely back into the structure and attach the collar to the ceiling or wall. Then attach the diffuser to its collar.

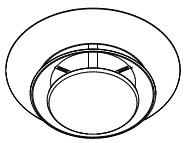

3. CONNECTING THE PIPES TO THE AIR EXCHANGER

3.1 Use the same techniques as above for connecting insulated and non-insulated pipes to the air exchanger.

3.2 Pay attention to the identification of the ports, directly on the air exchanger

Connection to exterior vents using insulated pipes:

- Fresh air IN: connect to vent with grille
- Stale air OUTLET: connect to vent with non-return valve

Connection to interior diffusers using non-insulated pipes:

- FRESH air out
- STALE air in

4. DRAIN CONNECTION (HRV ONLY)

HRV models must be equipped with a drain (provided) to evacuate condensation. Proceed with the installation as shown in the image. Do not forget to create a loop in the hose to prevent odor backflow.

An optional drain kit is also available for ERV models if required.

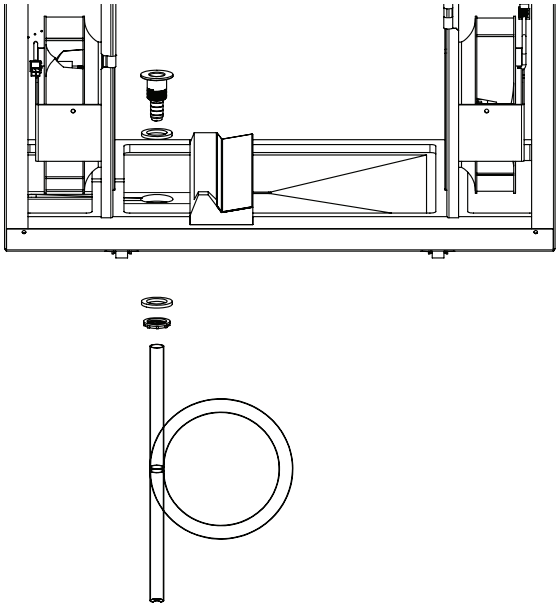

CONTROL(S) CONNECTION

A 4-conductor wire (12 V) is required to connect the controls. They can be connected either in series or in parallel. Preferably parallel since it is easier to diagnose should a problem arise.

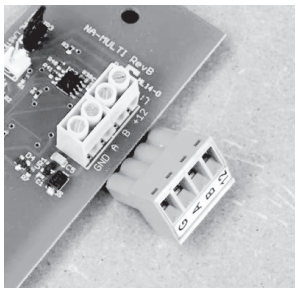

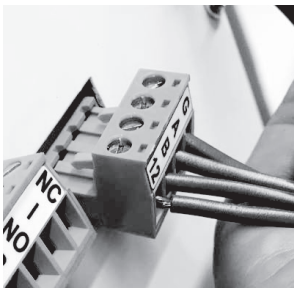

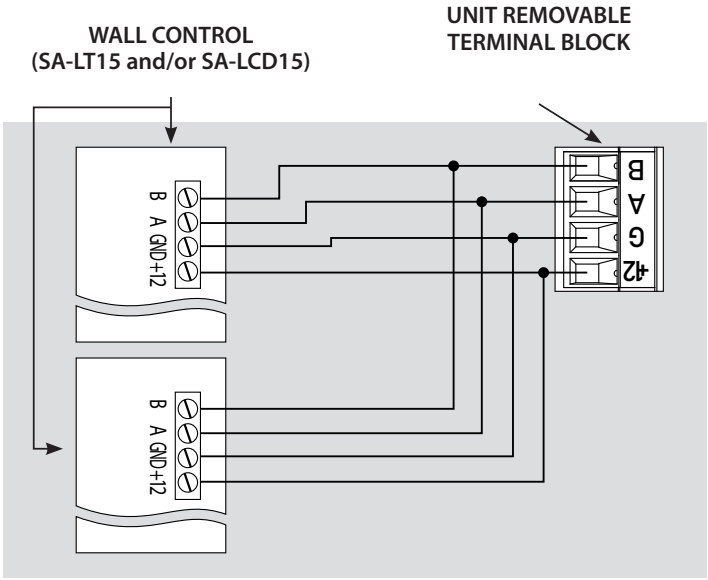

Standard Furnace Interlock

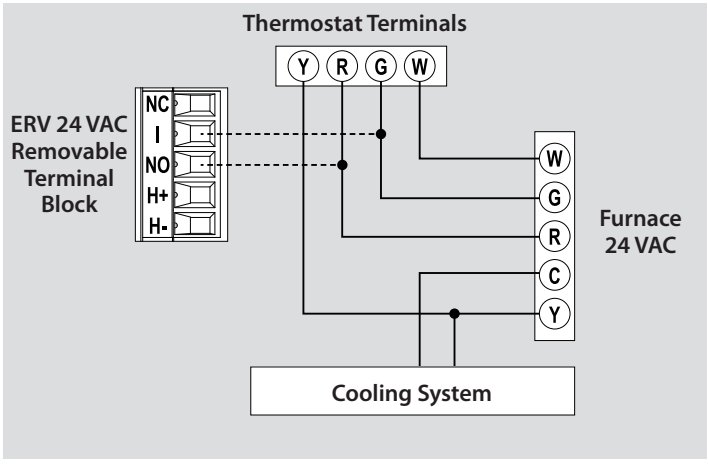

Alternate Furnace Interlock

If the standard interlocking method has the unwanted effect of bringing on the AC, i.e. thermostats that do not isolate "G" from "Y", use the alternate method shown below.

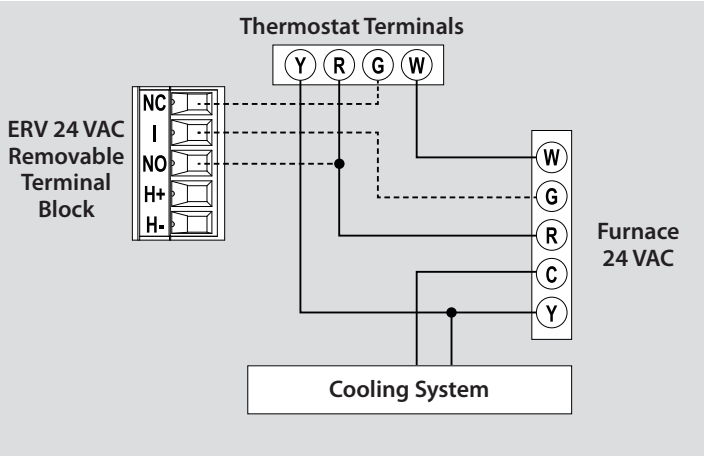

INITIAL BALANCING PROCEDURE

Note: This unit is factory balanced before shipment. The procedure below may be used to adjust airflow rates on-site when required to meet specific installation requirements.

IMPORTANT

You will need a pressure meter with a range of 0 - 1 inches of water gauge.

Begin with the Fresh Air Ports (1-2)

1. In the table corresponding to your unit, locate the desired airflow values.
2. Remove filters.
3. Plug the pressure meter probes in the appropriate ports.
4. Unplug and re-plug the device. It should start at low speed.
5. Hold both FRESH (UP) and STALE (DOWN) buttons for 3 seconds to activate LOW SPEED BALANCING mode. To enter HIGH SPEED BALANCING mode (and vice versa), press and hold both FRESH (UP) and STALE (DOWN) buttons for 3 seconds.

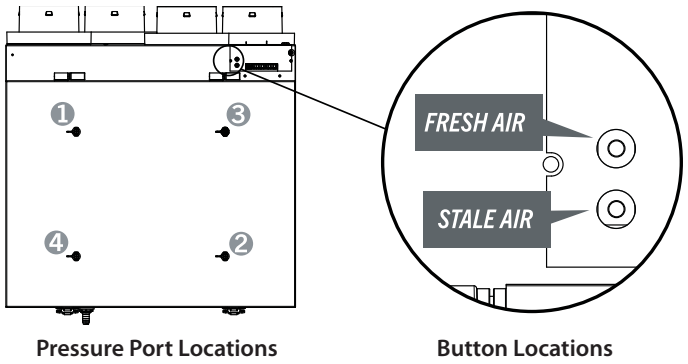

Pressure Port Locations | Button Locations

6. Press the FRESH air (UP) and STALE air (DOWN) buttons to set the desired motor. Each press of a button will reduce the motor speed until the minimum is reached, if any more pressure the motor will return to its maximum speed. You will need to press the tuning button about 30 times before reaching minimum speed. When you reach the lowest speed (0%) additional pressure will restart the cycle at 100%. The device will return to normal mode when you stop pressing one or more adjustment buttons for more than 10 seconds.
7. To exit BALANCING mode, stop pressing the buttons for 10 seconds. The device will store the new speeds in the memory of the circuit board.
8. Repeat steps 3 to 7 for balancing the exhaust.
9. Reinstall the filters

BALANCING
HRV 150 CFM

Works with models
xSKHH150R and xSKHH150RC.

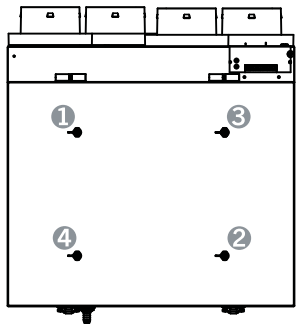

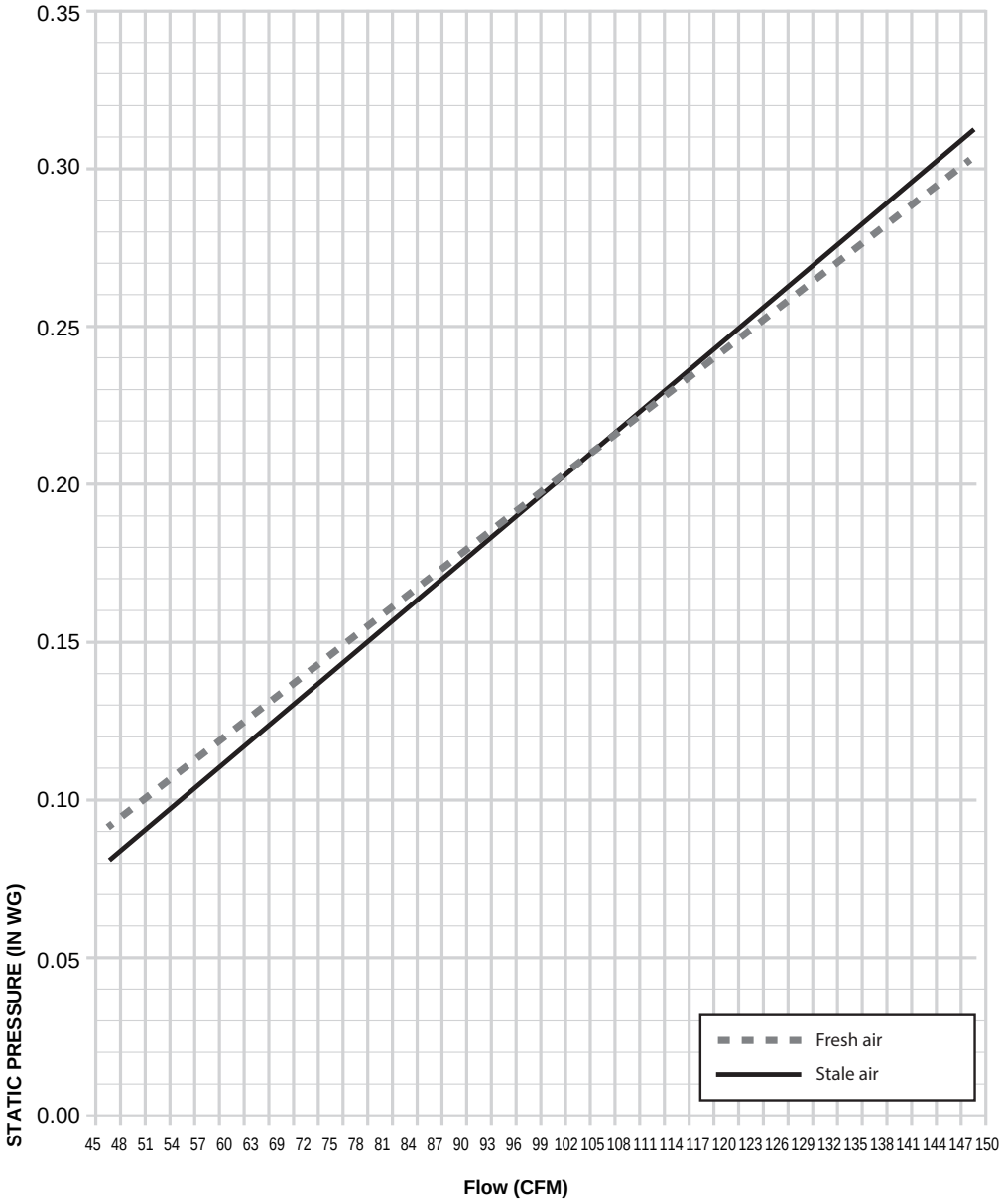

Flow (CFM)	Pressure (in wg)	
	1-2 Fresh	3-4 Stale
45	0.093	0.081
48	0.099	0.087
51	0.105	0.094
54	0.111	0.100
57	0.117	0.107
60	0.123	0.114
63	0.129	0.120
66	0.135	0.127
69	0.141	0.133
72	0.147	0.140
75	0.153	0.147
78	0.159	0.153
81	0.165	0.160
84	0.171	0.166
87	0.177	0.173
90	0.183	0.180
93	0.189	0.186
96	0.195	0.193
99	0.201	0.199
102	0.207	0.206
105	0.213	0.213
108	0.219	0.219
111	0.225	0.226
114	0.231	0.232
117	0.237	0.239
120	0.243	0.246
123	0.249	0.252
126	0.255	0.259
129	0.261	0.265
132	0.267	0.272
135	0.273	0.279
138	0.279	0.285
141	0.285	0.292
144	0.291	0.298
147	0.297	0.305
150	0.303	0.312

Recommended values at low speed

Rooms	Extraction Capacity			
	Min . (L/s)	Min . (CFM)	Max . (L/s)	Max . (CFM)
1	16	34	24	51
2	18	38	28	59
3	22	47	32	68
4	26	55	38	81
5	30	64	45	95
More than 5	Consult a specialist to ensure compliance with the CAN/CSA-F326-M standard, "Mechanical Ventilation for Dwellings"			

Excerpt from Table 9.32.3.3 of CNB Canada 2010, Vol. 2

BALANCING
ERV 130 CFM

Works with models
xSKHE130R and xSKHE130RC.

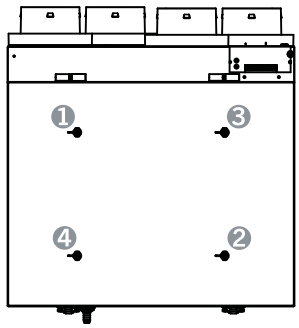

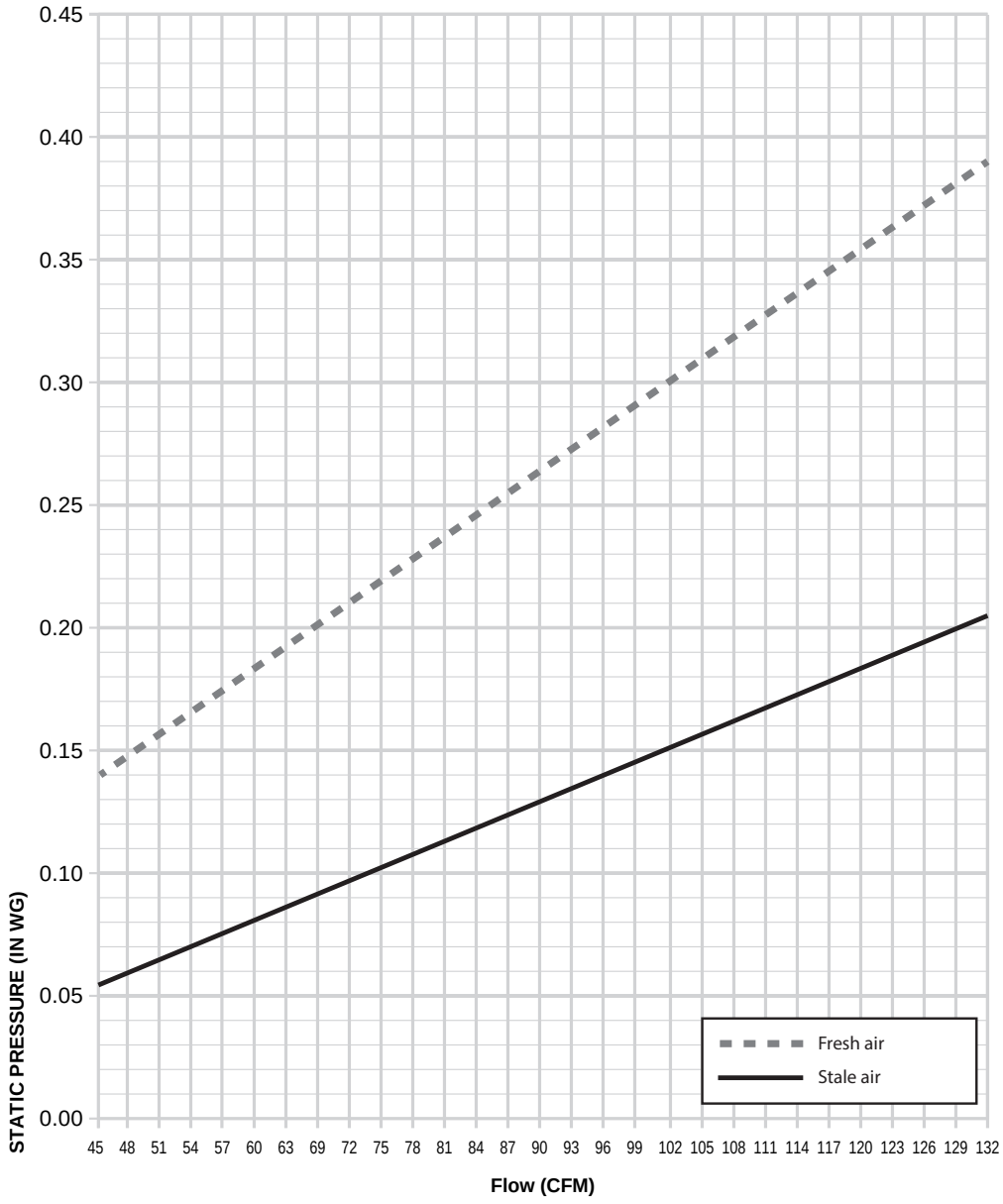

Flow (CFM)	Pressure (in wg)	
	1-2 Fresh	3-4 Stale
45	0.137	0.058
48	0.146	0.063
51	0.154	0.068
54	0.163	0.073
57	0.172	0.079
60	0.181	0.084
63	0.189	0.089
66	0.198	0.094
69	0.207	0.099
72	0.215	0.104
75	0.224	0.109
78	0.233	0.114
81	0.241	0.119
84	0.250	0.124
87	0.259	0.130
90	0.268	0.135
93	0.276	0.140
96	0.285	0.145
99	0.294	0.150
102	0.302	0.155
105	0.311	0.160
108	0.320	0.165
111	0.328	0.170
114	0.337	0.175
117	0.346	0.181
120	0.355	0.186
123	0.363	0.191
126	0.372	0.196
129	0.381	0.201
132	0.389	0.206

Recommended values at low speed

Rooms	Extraction Capacity			
	Min . (L/s)	Min . (CFM)	Max . (L/s)	Max . (CFM)
1	16	34	24	51
2	18	38	28	59
3	22	47	32	68
4	26	55	38	81
5	30	64	45	95
More than 5	Consult a specialist to ensure compliance with the CAN/CSA-F326-M standard, "Mechanical Ventilation for Dwellings"			

Excerpt from Table 9.32.3.3 of CNB Canada 2010, Vol. 2

USE

The ERV was designed to operate 24 hours a day, 7 days a week in intermittent mode (20 minutes ON - 40 minutes OFF). Typically, the system is designed, installed and calibrated by a specialized contractor to be very efficient and quiet.

High levels of indoor relative humidity during the heating season can cause water condensation on windows and less insulated surfaces. It's essential to control water condensation to prevent health problems related to mold growth.

The following table gives the typical maximum indoor relative humidity levels required to prevent condensation at an indoor ambient temperature of 22 °C for a house with average performance windows.

Outdoor Temperature	Maximum Relative Humidity
-5 °C	45 %
-10 °C	40 %
-15 °C	35 %
-20 °C	30 %
-25 °C	25 %
-30 °C	20 %

When required you can increase or maintain the air quality by putting the ERV at high speed. Examples: Smokers, bad smell, many people visiting you

CONTROL-TIMER (SA-LT15)

Decora type wall control with timer for residential energy and heat recovery ventilators (ERV and HRV). Offered in a box (SA-LT15-B) for retail sales.

FEATURES

- Designed for standard 2" × 3" electrical boxes.
- Integrated high speed timer 20/40/60 minutes.
- Decora style wall plate included.

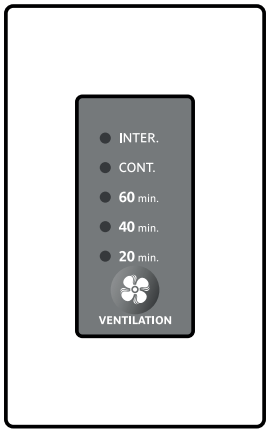

OPERATING MODES

- Intermittent - 20 minutes at low speed / 40 minutes standby.
- Continuous - at low speed.
- Timer - 20/40/60 minutes at high speed.
- OFF - does not operate until the unit is restarted by the user.

COMPATIBILITY

Compatible with energy and heat recovery ventilators (ERV and HRV) manufactured as of November 2020.

MODE CHANGE

To alternate between continuous and intermittent modes you need to press and hold the "ventilation" button for 4 seconds. After a power outage the machine will return into intermittent mode.

EXTENDED ABSENCE (MACHINE OFF)

To stop the machine for a long time you must press and hold the "ventilation" button for 10 seconds. In the event of a power failure, the machine returns to extended absence mode.

To exit the mode simply press the "ventilation" button briefly.

DIGITAL WALL CONTROL (SA-LCD15)

Decora type digital wall control for residential energy and heat recovery ventilators (ERV and HRV) with recirculation mode and humidity management. Offered in a boxed version (SA-LCD15-B) for in-store retail sales.

FEATURES

Designed for standard 2» × 3» electrical boxes. Decora style wall plate included.

OPERATING MODES

	ECONOMIC — Intermittent, 20 minutes in LOW speed and 40 minutes OFF. It's recommended to select this mode except during an extended absence from home
	CONTINUOUS — In HIGH speed or LOW speed
	HUMIDITY — Switches to HIGH speed when ambient relative humidity exceeds user-adjustable setpoint
	RECIRCULATION — In HIGH speed or LOW speed
OFF	OFF — Does not operate until restarted by user.



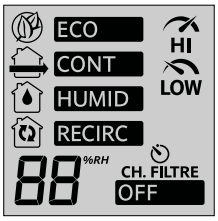

Economic mode
Continuous mode
Humidity mode
Recirculation mode
Humidity %

High speed
Low speed
Change filters
Off

COMPATIBILITY

Compatible with energy-recovery and heat-recovery ventilators (ERV and HRV) manufactured from November 2024 onward.

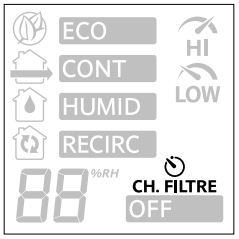

When this indicator light is on, it's time to change the filters.

Scheduled every 6 months

To reset, hold down the OK button for 10 seconds

ECONOMIC MODE

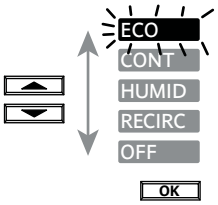

Select the desired mode using the arrows.

By pressing the OK button the current selection will flash. Press OK to confirm selection

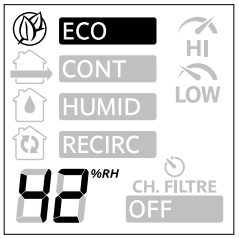

Current mode and humidity %.

CONTINUOUS MODE

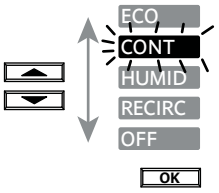

Select the desired mode using the arrows.

By pressing the OK button

the current selection will flash. Press OK to confirm selection

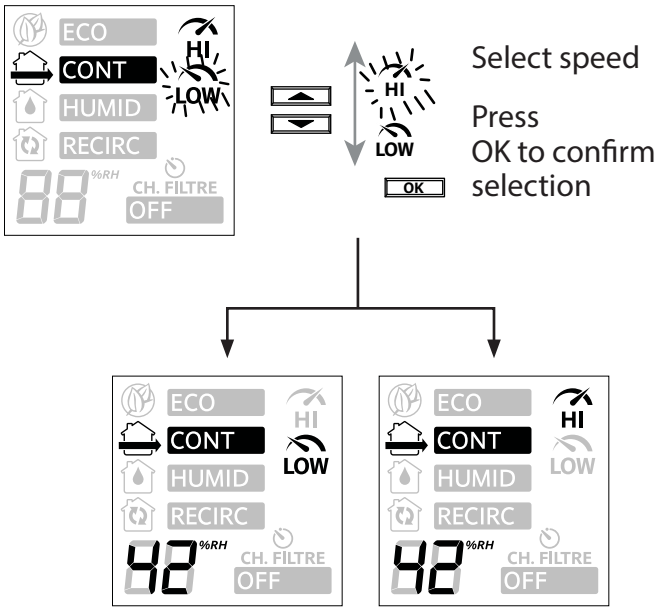

Current mode, speed and humidity %

HUMIDITY MODE

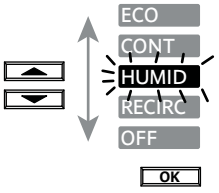

Select the desired mode using the arrows.

By pressing the OK button
the current selection will flash

Press OK to confirm selection.

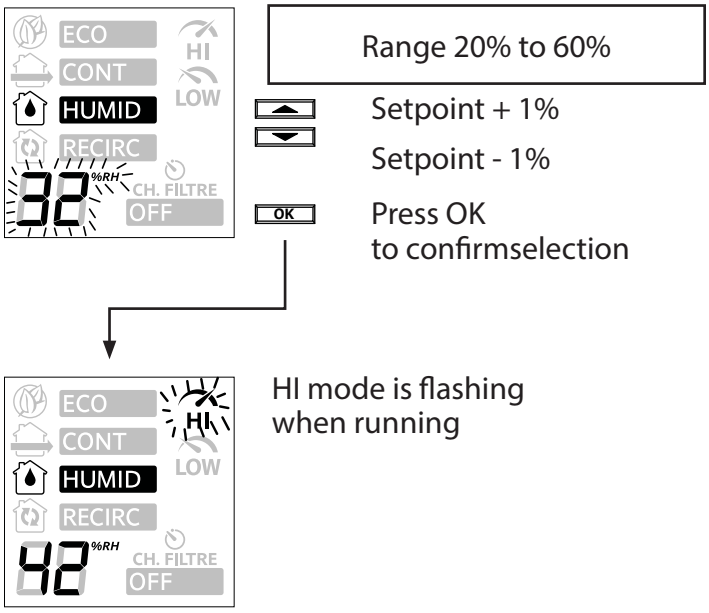

Current mode, speed and humidity %

RECIRCULATION MODE

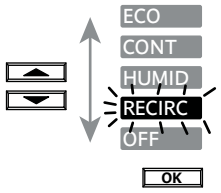

Select the desired mode using the arrows.

By pressing the OK button
the current selection will flash.

Press OK to confirm selection.

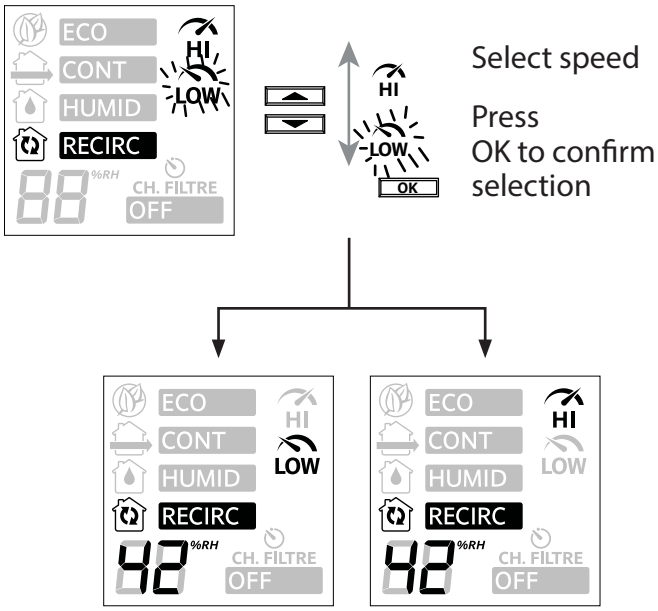

Current mode, speed and humidity %

EXTENDED ABSENCE (MACHINE OFF)

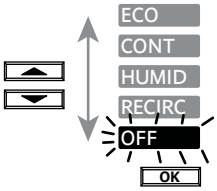

Select the desired mode using the arrows.

By pressing the OK button
the current selection will flash.

Press OK to confirm selection.

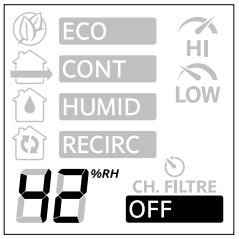

Current mode, speed and humidity %

MAINTENANCE SCHEDULE

Your system is equipped with two MERV 8 filters designed to protect the heat recovery core. These filters should be cleaned every 30 to 60 days. Keeping the recovery core clean is also essential to maintain system performance. A dirty core will reduce operating efficiency.

Maintenance Intervals:

- EVERY 30 TO 60 DAYS: Clean filters or replace them if necessary.
- ANNUALLY: Clean the recovery core.

To order a replacement filter kit of two (KIT-SA-FI-150), contact our customer service.

FILTER REPLACEMENT AND CLEANING

Remove the two filters from the device to clean them or replace them with two new filters.

1. Before washing, vacuum the surface to remove large dust and lint particles.
2. Lay the filter flat and spray both sides with a suitable cleaning detergent until the filter is thoroughly saturated. The amount of detergent required will depend on the quantity and type of contaminants trapped in the filter.

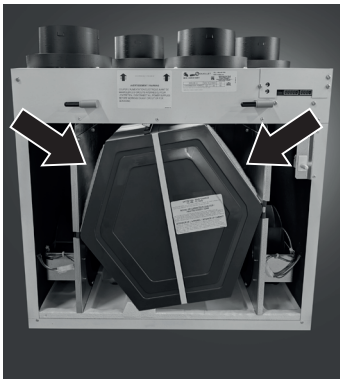



3. Place the filter with the dirtiest side facing downward and rinse it thoroughly with warm water. Turn the filter over and repeat the process.
4. Repeat Steps 2 and 3 until the filter is clean.
5. Remove excess water and allow the filter to drain until it can be handled without dripping.

IMPORTANT

Filters must be cleaned regularly to maintain maximum airflow through the system.

Do not exceed a water temperature of **93°C (200°F)**, as higher temperatures may damage the filter media.

Do not use oil sprays or chemical treatments on the filter, as they can significantly reduce its electrostatic filtering properties.

Do not wash filters in a dishwasher.

HEAT RECOVERY CORE

1. Remove both filters as described in the previous section.





2. Remove the recovery core from the unit. Resistance during removal is normal. Hold the core firmly and pull straight outward.

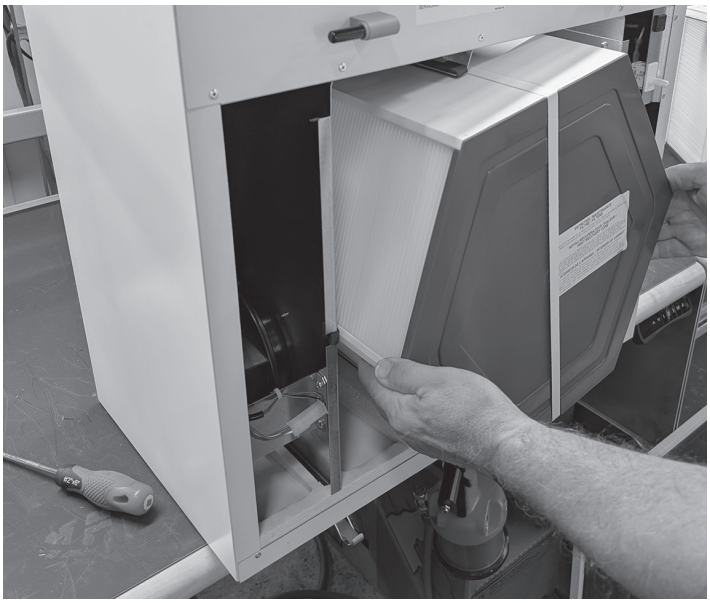

3. Rinse the core with clean water at room temperature (neither hot nor cold). If the core is greasy, it may be soaked for approximately one minute in water containing a small amount of dishwashing detergent. Allow the core to drain for several minutes.
4. Reinstall the core with the label facing outward and the airflow arrow pointing upward.
5. Reinstall the filters.

CONDENSATE DRAIN INSPECTION (IF APPLICABLE)

Once a year, or as needed, inspect the condensate drainage system to ensure it is free of obstruction.

LIMITED GUARANTEE

The motor inside the Innovair Solutions unit is guaranteed to the original purchaser for the duration of FIVE (5) years from the date of purchase. All other components with the exception of the filters that are guaranteed for ONE (1) year. Innovair Solutions will repair or replace at its choice the component(s) which upon inspection by an authorized Innovair Solutions dealer proves to have failed in normal use due to defects in material or workmanship. Innovair Solutions will at its discretion, replace the unit if necessary. The warranty is void if any attempts have been made by unauthorized personnel to service or modify the unit as well as operating the unit at voltages other than that specified on the unit.

THE CUSTOMER IS RESPONSIBLE FOR ANY DELIVERY CHARGES WHEN SHIPPING THE UNIT TO INNOVAIR SOLUTIONS FOR WARRANTY REPAIRS OR WORK.

NOTES

NOTES

CUSTOMER SERVICE

IF YOU HAVE ANY QUESTIONS ABOUT THIS PRODUCT, PLEASE CONTACT OUR TECHNICAL SUPPORT TEAM.

OUELLET	innovair®		°STELPRO	epurair®
1 800 463-7043	CAN: 1 800 567-2733	US: 305 463-9998	1 800 363-3414 - electricians 1 866 766-6020 - consumers	1 800 205-1108
ouellet.com	dettson.com	innovair.com	stelpro.com	epurair.com